TITGEMEYER GTO

YOUR SOLUTION

Winches

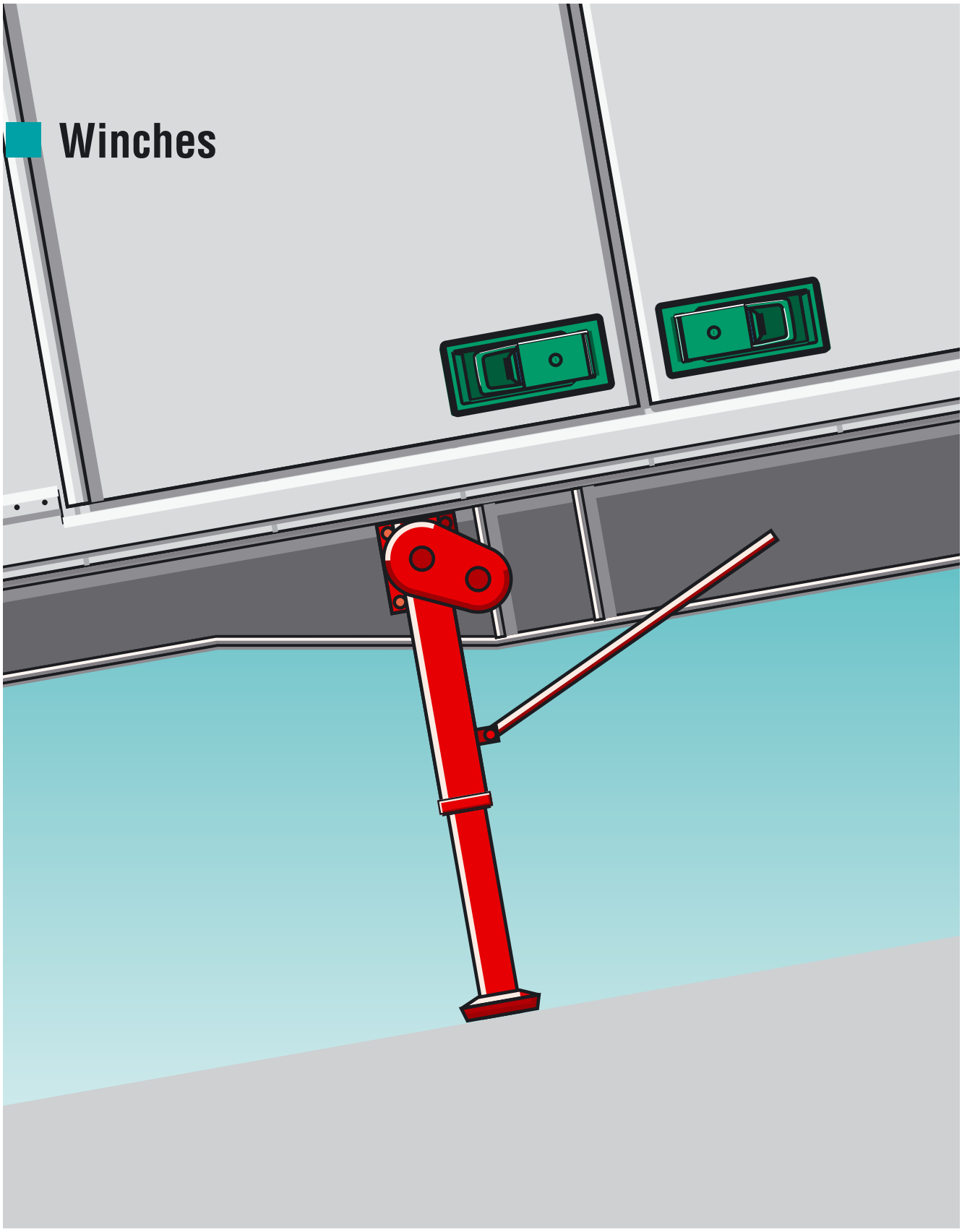

TITGEMEYER Gruppe20GB(0317)1

All rights reserved.
The technical data quoted in this catalogue, performance descriptions, recommendations and instructions e.g. for the installation of the components available from us, are without liability. These are based on our experience.
Claims against us as a consequence are expressly excluded as much of the application of our goods remains outside our direct influence.

It is a fundamental obligation of the user to ascertain and to decide wether the goods provided by us are appropriate for a particular application.

This catalogue is our intellectual property! Disclosure to third parties is prohibited.
Reproduction – even in part – as well as use of our illustrations and TITGEMEYER part-numbering systems is only permitted with our express permission in writing.

Subject to change.
Supply of goods is in conformity with our delivery and payment conditions.

Gebr. TITGEMEYER GmbH & Co. KG
Osnabrück

Over 100 years of tradition and expertise

At the turn of the century, an ironware wholesale business was established by the two Titgemeyer brothers, Adolf and Fritz, in their hometown of Melle. A few years later, offices were opened in the neighbouring town of Osnabrück. Since then, the business enterprise group TITGEMEYER has continuously developed and is totday a leader in the fields of fastening technology and commercial vehicle equipment. The medium sized family organization is now led by the third generation - always with the aim of supplying the optimum solution for the customer - from single fixings, right up to complex vehicle systems.

Fastening Technology

The more varied the requirements, the more individual our solution is.
The result: an extensive product range of fastening technology systems and solutions. New products are constantly being developed, as the manufacturing industry demands specially designed solutions.
TITGEMEYER introduced the POP® blind rivet to the German market.
Its application revolutionised traditional fastening technology.

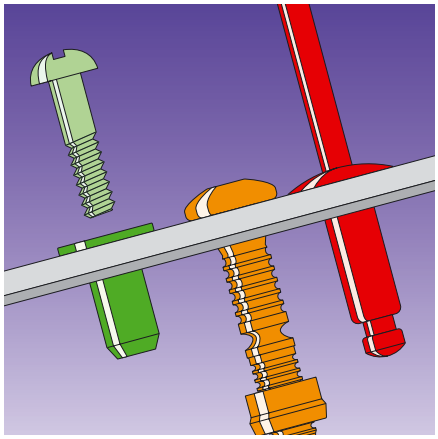

The TITGEMEYER fastening technology product range

- Blind Rivets
- Threaded Inserts
- Assembly Systems
- Installation Tools
- Sealants and Adhesives

Vehicle components with style

The ideas and wishes of our customers are our benchmark. That is why we carefully develop approved products and systems for the manufacture of modern commercial vehicles. Safety, cost effectiveness and the environment – these requirements are all satisfied by our product range. The original and innovative body kit system, GETO Van®, is only one of many system solutions available from TITGEMEYER today.

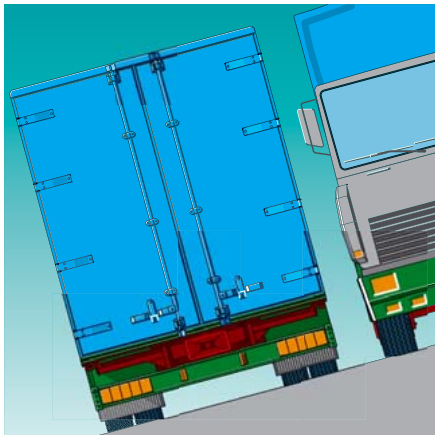

The TITGEMEYER commercial vehicle product range

- Body Kits
- Chassis Technology
- Bodywork Components
- Bodywork Systems

Winches	Swap body components	Supporting legs and accessorie 20.01.01.1
		Corner casting 20.01.02.1
		Container twist locks 20.01.03.1
		Lifting arms 20.01.04.1
		Accessories 20.01.05.1
	Landing legs	Landing legs.....20.02.01.1
	Winches	Fixed Winches 20.03.01.1
		Spare wheel lifting winches.....20.03.02.1

Content

148 976 020 .....20.02.01.6

182 556 000 .....20.01.04.4
182 572 000 .....20.01.04.4

182 936 002 .....20.01.04.4

183 014 000 .....20.01.04.4

204 002 000 .....20.01.01.5
204 003 000 .....20.01.01.5
204 004 000 .....20.01.01.5
204 005 000 .....20.01.01.5
204 006 000 .....20.01.05.1
204 009 000 .....20.01.01.6
204 010 000 .....20.01.01.4
204 012 000 .....20.01.01.4
204 015 000 .....20.01.01.7
204 019 000 .....20.01.01.7
204 020 000 .....20.01.01.7
204 024 000 .....20.01.03.8
204 024 000 .....20.01.05.1
204 024 001 .....20.01.03.8
204 025 000 .....20.01.05.1
204 027 000 .....20.01.02.1
204 027 000 .....20.01.02.4
204 029 000 .....20.01.05.1
204 031 000 .....20.01.05.1
204 034 000 .....20.01.02.1
204 034 000 .....20.01.02.2
204 040 000 .....20.01.02.1
204 040 000 .....20.01.02.3
204 041 000 .....20.01.02.1
204 041 000 .....20.01.02.3
204 042 000 .....20.01.02.1
204 042 000 .....20.01.02.3
204 043 000 .....20.01.02.1
204 043 000 .....20.01.02.3
204 045 000 .....20.01.02.1
204 045 000 .....20.01.02.3
204 047 000 .....20.01.02.1
204 047 000 .....20.01.02.2
204 048 000 .....20.01.02.1
204 048 000 .....20.01.02.2
204 050 000 .....20.01.02.1
204 051 000 .....20.01.02.1
204 051 000 .....20.01.02.4
204 057 000 .....20.01.01.3
204 058 000 .....20.01.01.2
204 059 000 .....20.01.01.2
204 062 000 .....20.01.01.2
204 064 000 .....20.01.01.2
204 065 000 .....20.01.01.2
204 066 000 .....20.01.01.2
204 068 000 .....20.01.05.2
204 070 000 .....20.01.03.1
204 070 000 .....20.01.03.2
204 070 000 .....20.01.03.3
204 072 000 .....20.01.03.2
204 072 000 .....20.01.03.4
204 074 000 .....20.01.03.2
204 074 000 .....20.01.03.3
204 075 000 .....20.01.03.2
204 075 000 .....20.01.03.5
204 076 000 .....20.01.03.2
204 076 000 .....20.01.03.6
204 077 000 .....20.01.03.1
204 077 000 .....20.01.03.2
204 077 000 .....20.01.03.6
204 079 000 .....20.01.03.2
204 079 000 .....20.01.03.6
204 080 000 .....20.01.03.2
204 080 000 .....20.01.03.4
204 081 000 .....20.01.03.1
204 083 000 .....20.01.03.2
204 083 000 .....20.01.03.5
204 085 000 .....20.01.03.1
204 085 000 .....20.01.03.2
204 085 000 .....20.01.03.4
204 089 000 .....20.01.03.1
204 089 000 .....20.01.03.2
204 089 000 .....20.01.03.3
204 095 010 .....20.01.03.7
204 096 010 .....20.01.03.7

204 102 000 .....20.01.04.4
204 103 000 .....20.01.04.4
204 108 010 .....20.01.03.8
204 108 011 .....20.01.03.8
204 111 010 .....20.01.03.8
204 113 010 .....20.01.03.9
204 120 000 .....20.01.04.1
204 120 000 .....20.01.04.2
204 121 000 .....20.01.04.1
204 121 000 .....20.01.04.2
204 124 000 .....20.01.04.1
204 124 000 .....20.01.04.2
204 128 000 .....20.01.04.1
204 128 000 .....20.01.04.3
204 130 000 .....20.01.04.1
204 130 000 .....20.01.04.2
204 132 000 .....20.01.04.1
204 132 000 .....20.01.04.2
204 134 000 .....20.01.04.1
204 134 000 .....20.01.04.3
204 142 000 .....20.01.03.10
204 143 000 .....20.01.03.10
204 144 000 .....20.01.03.10
204 145 000 .....20.01.03.10
204 146 000 .....20.01.03.1
204 146 000 .....20.01.03.10
204 146 100 .....20.01.03.11
204 147 000 .....20.01.03.1
204 147 000 .....20.01.03.10
204 147 100 .....20.01.03.11
204 150 000 .....20.01.03.10
204 150 100 .....20.01.03.11
204 151 000 .....20.01.03.10
204 151 100 .....20.01.03.11
204 152 000 .....20.01.03.10
204 153 000 .....20.01.03.10
204 156 000 .....20.01.03.10
204 156 100 .....20.01.03.11
204 157 000 .....20.01.03.10
204 157 100 .....20.01.03.11
204 158 000 .....20.01.03.10
204 159 000 .....20.01.03.10
204 160 000 .....20.01.03.10
204 161 000 .....20.01.03.10
204 162 000 .....20.01.03.10
204 163 000 .....20.01.03.10
204 168 000 .....20.01.01.8
204 169 000 .....20.01.01.8
204 171 000 .....20.01.01.8
204 176 000 .....20.01.05.2
204 180 000 .....20.01.01.4
204 181 000 .....20.01.01.4
204 182 000 .....20.01.01.4
204 186 000 .....20.01.01.6

204 302 000 .....20.01.03.8
204 303 000 .....20.01.03.8
204 304 000 .....20.01.03.8
204 305 000 .....20.01.03.8
204 306 000 .....20.01.03.8
204 310 000 .....20.01.03.8
204 314 000 .....20.01.03.8

207 708 010 .....20.02.01.1
207 713 010 .....20.02.01.1
207 714 010 .....20.02.01.1
207 715 010 .....20.02.01.1
207 716 010 .....20.02.01.1
207 720 001 .....20.02.01.1
207 720 002 .....20.02.01.1
207 720 003 .....20.02.01.1
207 771 000 .....20.02.01.2
207 771 002 .....20.02.01.2
207 771 003 .....20.02.01.2
207 772 000 .....20.02.01.5
207 773 000 .....20.02.01.6
207 779 000 .....20.02.01.5

207 841 010 .....20.02.01.3
207 842 010 .....20.02.01.3
207 843 010 .....20.02.01.3
207 844 010 .....20.02.01.3
207 845 010 .....20.02.01.3
207 850 000 .....20.02.01.4
207 850 001 .....20.02.01.4
207 850 002 .....20.02.01.4
207 851 002 .....20.02.01.3
207 851 003 .....20.02.01.3
207 851 011 .....20.02.01.3
207 857 005 .....20.01.05.4
207 857 015 .....20.01.05.4
207 858 005 .....20.01.05.3
207 860 000 .....20.01.01.4
207 862 000 .....20.01.01.4
207 865 000 .....20.01.01.4
207 866 000 .....20.01.01.4

207 909 000 .....20.03.02.1
207 912 000 .....20.03.02.1
207 913 000 .....20.03.02.1
207 918 000 .....20.03.02.2
207 919 000 .....20.03.02.2
207 928 000 .....20.03.01.1
207 930 000 .....20.03.01.1
207 931 000 .....20.03.01.1
207 935 000 .....20.03.02.4
207 937 000 .....20.03.02.2
207 938 000 .....20.03.02.2
207 940 000 .....20.03.02.3
207 946 000 .....20.03.02.2
207 946 000 .....20.03.02.3
207 948 000 .....20.03.02.3
207 950 000 .....20.03.02.3
207 958 000 .....20.03.02.3
207 959 000 .....20.03.02.3
207 964 000 .....20.03.02.4
207 965 000 .....20.03.02.4
207 966 000 .....20.03.02.4
207 967 000 .....20.03.02.4
207 968 000 .....20.03.02.4
207 971 000 .....20.03.01.1
207 973 000 .....20.03.01.1
207 992 000 .....20.03.01.2

752 083 000 .....20.03.01.1

Supporting legs and accessorie

Components for swap body systems facilitate the stable storage of swap body systems and container systems, and fasten these to the respective carrier vehicle (lorry, trailer, railway truck).
The components for swap body systems are always to be considered in conjunction with the instructions for the operation of the related vehicle.
In Germany the TÜV regulations and the road traffic registration directive (StVZO) are to be observed, as are existing standards

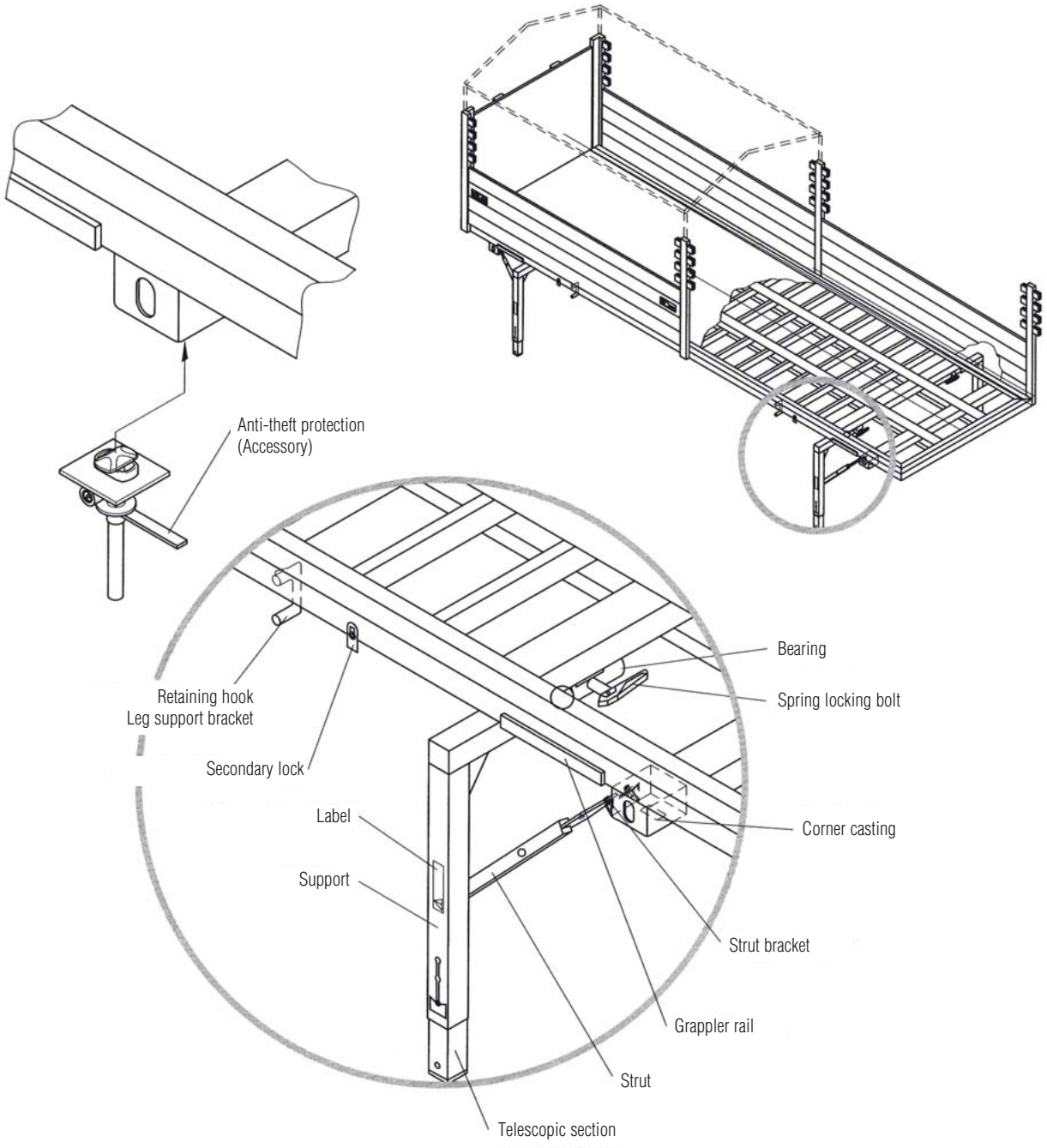

The technical specifications contained in this brochure are approximate and no guarantee is given as to their accuracy. Designs are subject to change.

Phone: +49 (0)5 41/58 22-0 Fax: +49 (0)5 41/58 22-9910 email: export@titgemeyer.com

Supporting legs and accessorie

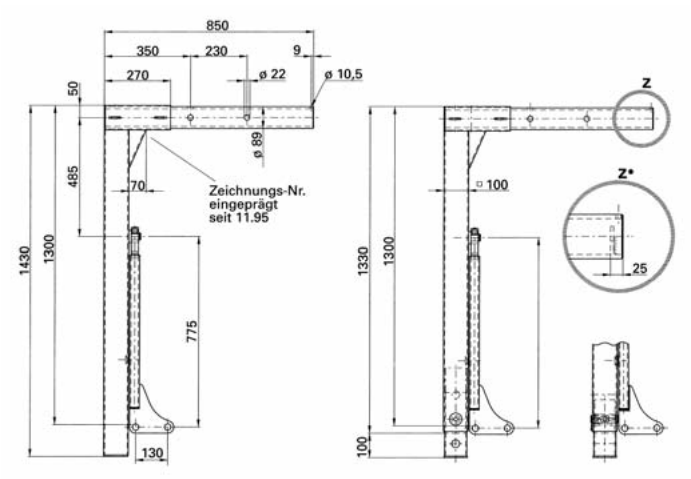

SS 86 A1

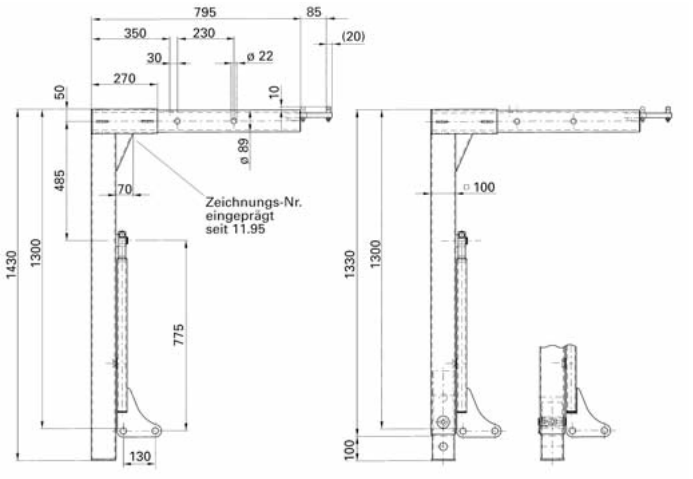

SS 86 A2

Supporting legs for swap bodies
Product line SS 86
for total container weight of max. 18000 kg
Dimensions in accordance with DIN 284, Form A1 and A2
"Bundesbahn" (German railways) certificate 629
Material: Steel, primed

Type	Part No.	Standard strut	Safety strut	Hole for retaining hook	In acc. DIN EN 284	Container total weight [max. kg]	Supporting leg crosssection [mm]	Total height [mm]	Weight approx. [kg/each]	**Article No.**
Rigid version										
SS 86 SKL	640.497.000	•	–	•	A1	18000	100 x 100	1430	37.0	**204 059 000**
SS 86 SKBL	640.498.000	–	•	•	A1	18000	100 x 100	1430	37.0	**204 058 000**
SS 86 SKL2	640.499.000	•	–	•	A2	18000	100 x 100	1430	37.0	**204 062 000**[1]
SS 86 SKBL2	640.500.000	–	•	•	A2	18000	100 x 100	1430	37.0	**–**[1]
Telescopic version (1 x 100 mm)										
SS 86 TSKL	640.501.000	•	–	•	A1	18000	100 x 100	1330/1430	39.0	**204 065 000**
SS 86 TSKBL	640.502.000	–	•	•	A1	18000	100 x 100	1330/1430	39.0	**204 064 000**
SS 86 TSKL2	640.503.000	•	–	•	A2	18000	100 x 100	1330/1430	39.0	**204 066 000**[1]
SS 86 TSKBL2	640.504.000	–	•	•	A2	18000	100 x 100	1330/1430	39.0	**–**[1]
SS 86 TSKXL	640.870.000	•	–	•	A1	18000	100 x 100	1330/1430	40.0	**–**
SS 86 TSKXBL	640.871.000	–	•	•	A1	18000	100 x 100	1330/1430	40.0	**–**
SS 86 TSKXL2	640.872.000	•	–	•	A2	18000	100 x 100	1330/1430	40.0	**–**[2]
SS 86 TSKXBL2	640.873.000	–	•	•	A2	18000	100 x 100	1330/1430	40.0	**–**[2]

[1] *With sliding lock against unhooking*
[2] *With sliding lock against unhooking and captive telescopic section*

Special versions and other sizes available on request.

The technical specifications contained in this brochure are approximate and no guarantee is given as to their accuracy. Designs are subject to change.

Supporting legs and accessorie

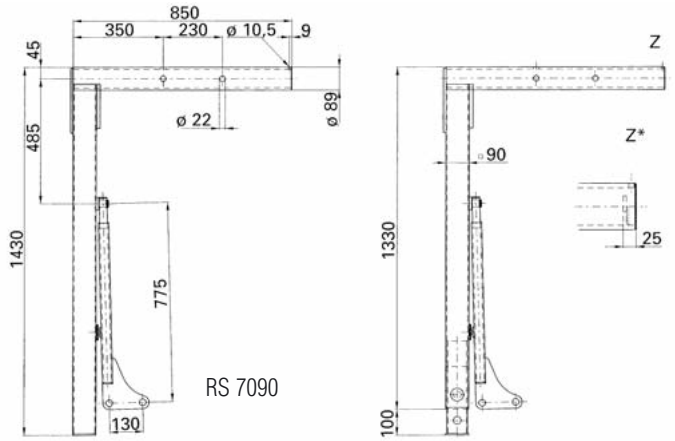

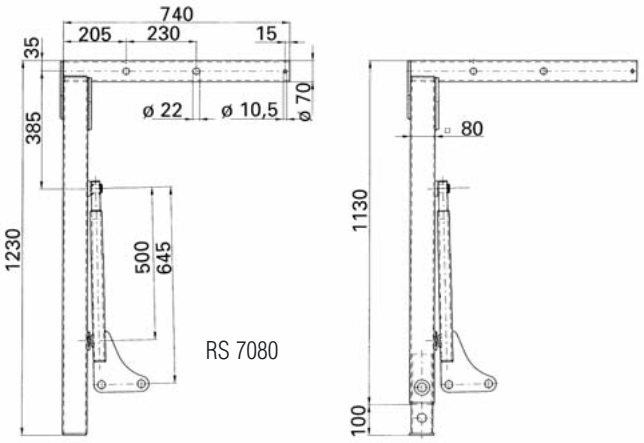

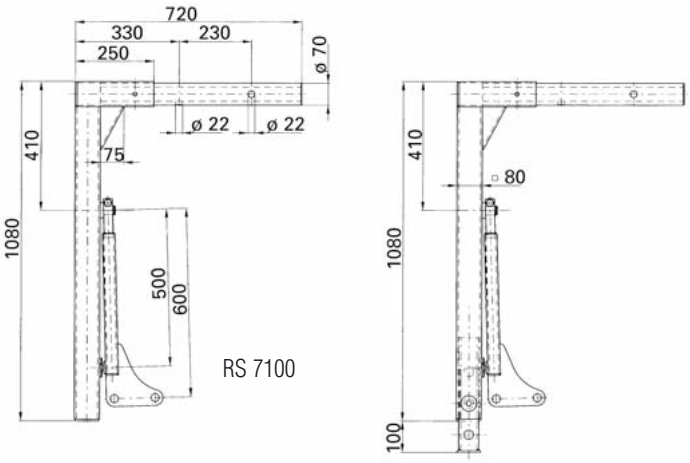

Supporting legs for swap bodies
Product line RS
for total container weights from 3000 to 16000 kg
Material: Steel, primed

Type	Part No.	Standard strut	Safety strut	Hole for retaining hook	In acc. DIN EN 284	Container total weight [max. kg]	Supporting leg crosssection [mm]	Total height [mm]	Weight approx. [kg/each]	**Article No.**
Rigid version										
RS 7080 SK	641.206.000	•	–	–	–	6000	80 x 80	1230	25.5	**–**
RS 7080 SKB	641.207.000	–	•	–	–	6000	80 x 80	1230	25.5	**–**
RS 7090 SK	640.071.000	•	–	–	–	10000	90 x 90	1430	36.0	**204 057 000**
RS 7090 SKB	640.214.000	–	•	–	–	10000	90 x 90	1430	36.0	**–**
RS 7100 SVB	641.213.000	–	•	–	–	16000	80 x 80	1080	36.5	**–**[3]
Telescopic version (1 x 100 mm)										
RS 7080 TSK	641.208.000	•	–	–	–	6000	80 x 80	1130/1230	27.0	**–**
RS 7080 TSKB	641.209.000	–	•	–	–	6000	80 x 80	1130/1230	27.0	**–**
RS 7090 TSK	640.075.000	•	–	–	–	10000	90 x 90	1330/1430	36.0	**–**
RS 7090 TSKB	640.215.000	–	•	–	–	10000	90 x 90	1330/1430	37.5	**–**
RS 7100 TSVB	641.214.000	–	•	–	–	16000	80 x 80	1080/1180	38.0	**–**[3]

[3] *For swap bodies with low height frame (jumbo containers)*

Special versions and other sizes available on request.

The technical specifications contained in this brochure are approximate and no guarantee is given as to their accuracy. Designs are subject to change.

Supporting legs and accessorie

Spring locking bolt
For locking the bearing tube in the bearing.
With the spring locking bolt open, the supporting leg can be folded down or up.
Material: Casing Steel, raw
Bolt, spring and handle electro galvanised

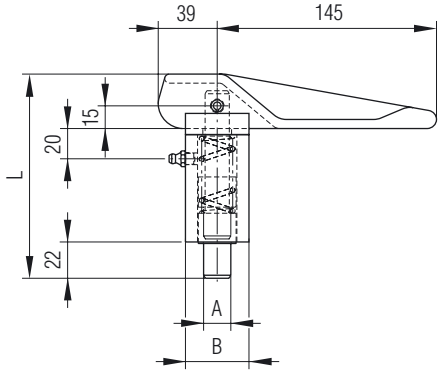

Spring bolt

Type	Dimensions A ø [mm]	B ø [mm]	L [mm]	Part No.	Weight approx. [kg/each]	**Article No.**
FS 97	16	42	133	640 216 000	1.2	**204 010 000**
	18	42	133	640 218 000	1.2	**204 180 000**
	20	42	133	640 220 000	1.2	**204 181 000**
	25	42	133	640 225 000	1.2	**204 182 000**
	30	42	133	640 230 000	1.2	**204 012 000**

Safety device for support leg (spring bolt)
to hold support legs on interchangeable bodies inside the receptacle tube in horizontal (neutral position) and vertical position (working position). In order to save the telescopic supports, which balance the unevenness of the ground.
Compact, solid construction with solid bolts, to put in alternatively left or right onto the leg support bracket. Handy operating lever with stop at 90° opening position. Maintenance friendly through lubricator nipples mounted inside the bolt case.

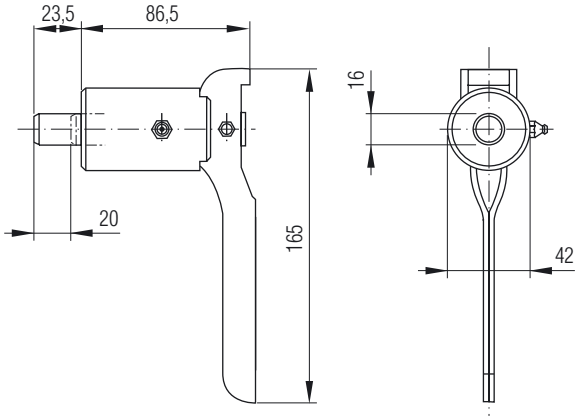

207 860 000

Spring bolt
With solid bolts ø 16 mm
Material: Steel, raw
Weight: approx. 0.97 kg/each
Article No. 207 860 000

Spring bolt
With solid bolts ø 30 mm, at the end inclinded to the offset
Material: Steel, raw
Weight: approx. 1.17 kg/each
Article No. 207 862 000

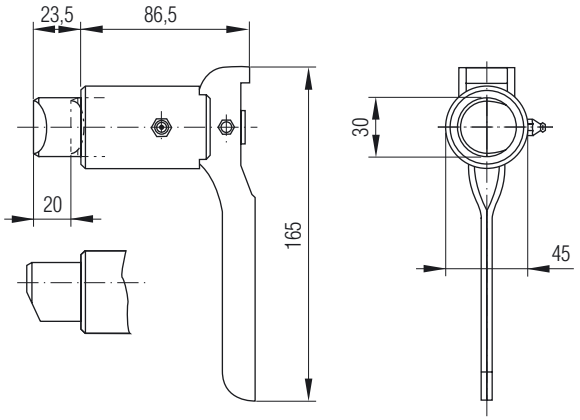

207 862 000

Loose for spare parts requirements:
Handle for Artikle No. 207 860/862
Weight: approx. 0.10 kg/each
Article No. 207 865 000

Cases for handle
Article No. 207 866 000

The technical specifications contained in this brochure are approximate and no guarantee is given as to their accuracy. Designs are subject to change.

Supporting legs and accessorie

Leg support bracket short
Type TS 93 SN , for carrying tube ø 89 mm,
appropriate to SS 86, RS 7090
Material: Steel, primed
Weight: approx. 7.0 kg/each
Article No. 204 002 000 – left type
204 003 000 – right type

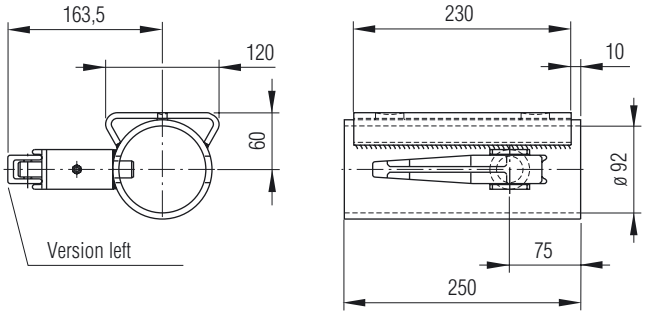

Leg support bracket
Type TS 7350, for carrying tube ø 70 mm,
appropriate to RS 7080, RS 7070
Material: Steel, primed
Weight: approx. 14.0 kg/each
Article No. 204 004 000 – left type
204 005 000 – right type

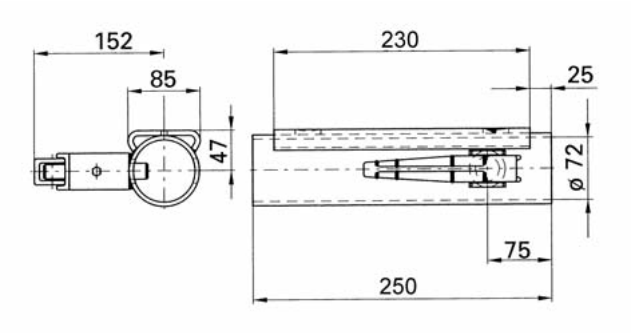

Supporting legs and accessorie

Strut bracket
To receive the support leg strut for parked containers

Strut bracket type GS 102
Material: Steel, raw
Weight: approx. 1.0 kg/each
Article No. 204 009 000

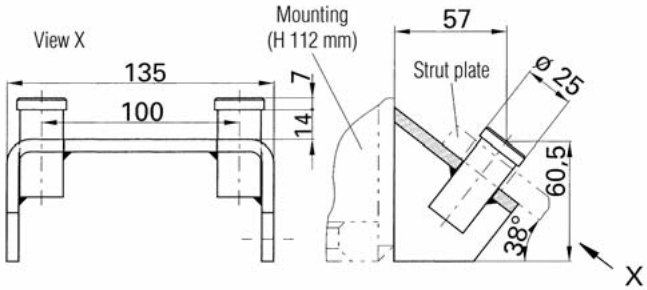

Strut bracket type GS 103
Material: Steel, raw
Weight: approx. 0.7 kg/each
Article No. 204 186 000

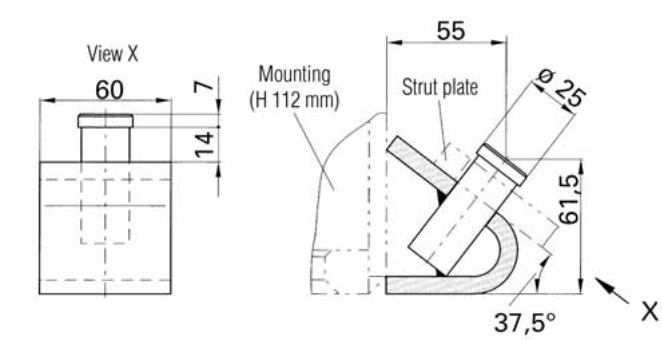

Secondary locks

For additionally securing the supporting legs in the leg support brackets or retaining hooks when not in use.

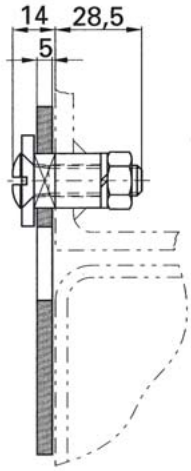

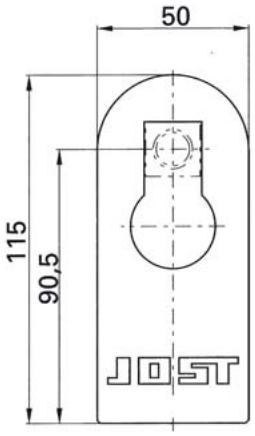

ZS 7003
204 015 000

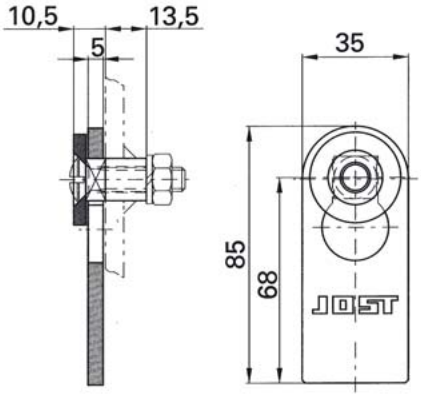

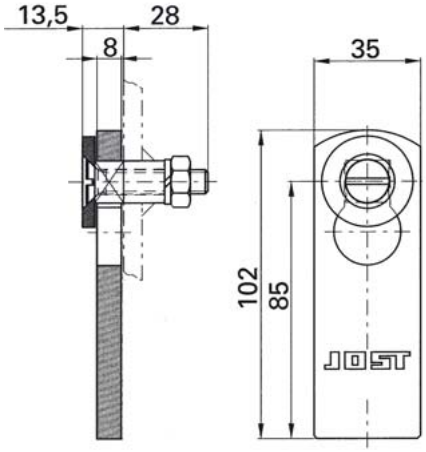

ZS 7006
204 019 000

ZS 7009
204 020 000

Type	Version	Part No.	Weight approx. [kg]	**Article No.**
ZS 7003	With bolted joint	640.080.000	0.4	**204 015 000***
ZS 7006	With sleeve, without bolted joint	640.126.000	0.12	**204 019 000***
ZS 7009	With sleeve, with bolted joint	640.885.000	0.4	**204 020 000***

** Cases / trap electro galvanised*

The technical specifications contained in this brochure are approximate and no guarantee is given as to their accuracy. Designs are subject to change.

Supporting legs and accessorie

Leg support brackets and retaining hooks
Leg support brackets and retaining hooks are welded onto the swap body frame. They secure the supporting legs when not in use. To accommodate the retaining hook, a 30 mm hole needs to be drilled into the supporting leg.

Leg support bracket SL 550
For welding to interchangeable container frame, for retaining the supporting legs when not in use.
Part No. 640.771.000
Material: Steel, raw
Weight: approx. 2.7 kg/piece
Article No. 204 168 000

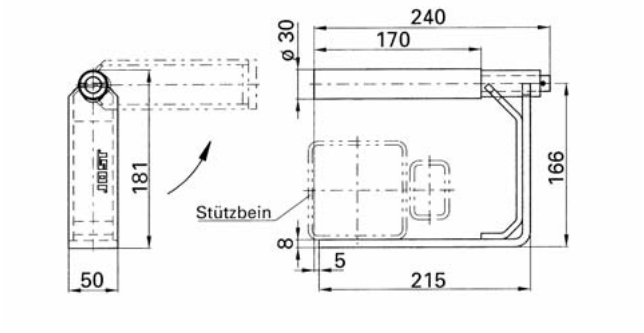

Leg support bracket SL 555
For welding to interchangeable container frame, for retaining the supporting legs when not in use.
Part No. 641.223.000
Material: Steel, raw
Weight: approx. 1.8 kg/piece
Article No. 204 169 000

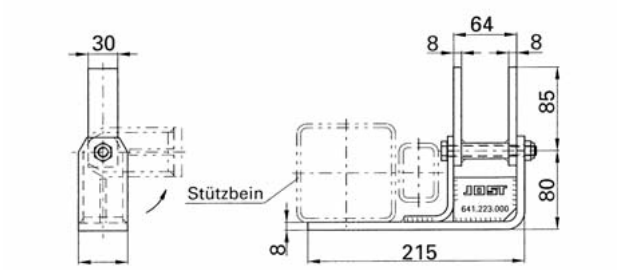

Decal
Secure supporting legs using 2 locks in acc. with EN 284
Two colours (yellow/black) on a white background, made of self-adhesive film
Part No. 640.000.002
Article No. 204 171 000

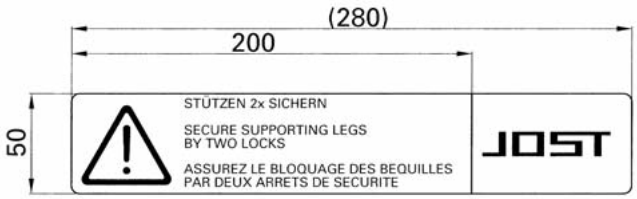

The technical specifications contained in this brochure are approximate and no guarantee is given as to their accuracy. Designs are subject to change.

Corner casting

Corner castings are welded to swap bodies, flatbeds or containers.
The swap bodies are fastened to the vehicle or trailer using the corner castings.

Model overview

Type	Container type	Dimensions B x H x T [mm]	Mate-rial[1]	Standard	Part No.	Weight approx. [kg/each]	**Article No.**
CC 297 TL	Freight container	178 x 118 x 162	G	ISO 1161	905.297.000	11.0	**204 040 000**
CC 298 TR					905.298.000	11.0	**204 041 000**
CC 299 BL					905.299.000	11.0	**204 042 000**
CC 300 BR					905.300.000	11.0	**204 043 000**
CC 195	Swap body 2500 mm<	180 x 112 x 188	G	~ EN 284	905.195.000	9.5	**204 050 000**
CC 386	Swap body 2550 mm	180 x 112 x 220	G	EN 284	905.386.101	10.8	**204 047 000**
CC 463		180 x 117 x 220	G		905.463.101	10.9	**204 034 000**
CC 397	Swap body 2550 mm	180 x 112 x 172	G	~ EN 284	905.397.101	8.2	**204 048 000**
CW 7454	Interchangeable flatbed 2550 mm	180 x 117 x 192	S	~ EN 284	905.454.000	8.5	**204 045 000**
CC 012	Special designs	130 x 80 x 120	G	–	905.074.000	4.0	**204 051 000**[2]
CC 320		180 x 20 x 120		–	640.001.055	2.2	**204 027 000**

[1] *Material: G = cast steel housing S = sheet steel housing*
[2] *For a max. container width of 2390 mm and a floor opening not in accordance with ISO. Can only be used in conjunction with the F 10 SK and VA 11 SK locks.*

~ similar EN 284

For swap body with a vehicle width of 2500 mm

Versions

Type	Material	Standard	Weight [kg]	Part No.	**Article No.**
CC 195	Cast steel housing	~EN 284	9.5	905.195.000	**204 050 000**

~ similar EN 284

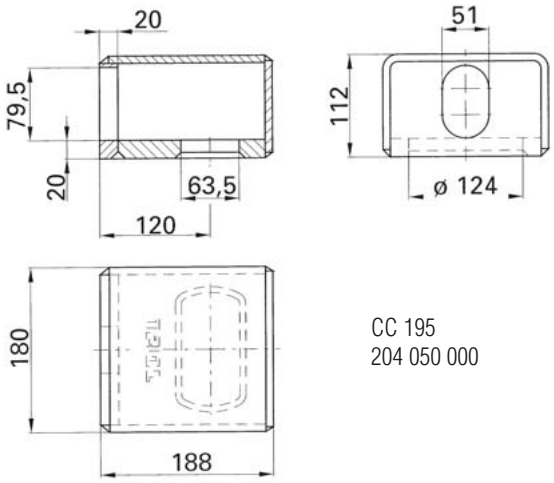

CC 195
204 050 000

The technical specifications contained in this brochure are approximate and no guarantee is given as to their accuracy. Designs are subject to change.

Phone: +49 (0)5 41/58 22-0 Fax: +49 (0)5 41/58 22-9910 email: export@titgemeyer.com

Corner casting

For swap body with a vehicle width of 2500 mm

Versions

Type	Material	Standard	Weight [kg]	Part No.	**Article No.**
CC 463	Cast steel housing	EN 284	10.9	905.463.101	**204 034 000**
CC 386	Cast steel housing	EN 284	10.8	905.386.101.	**204 047 000**

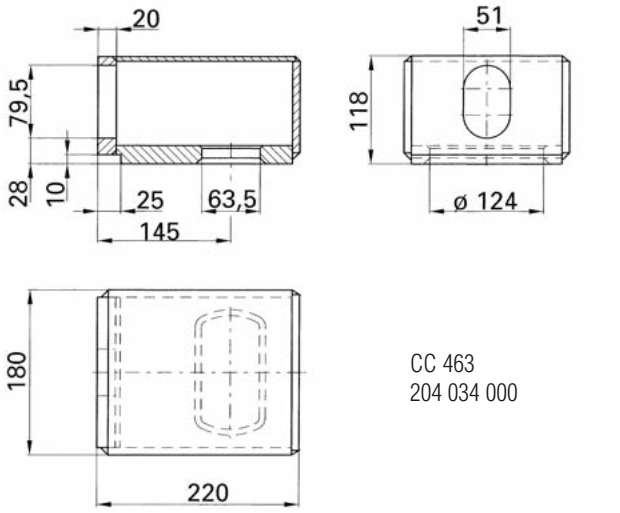

CC 463
204 034 000

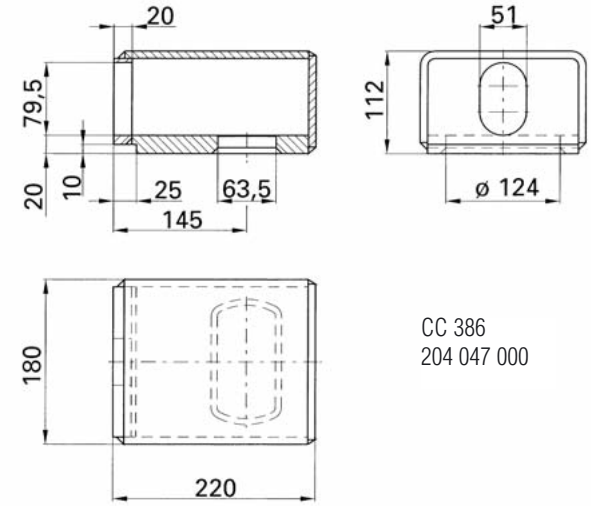

CC 386
204 047 000

Interchangeable flatbed with a vehicle width of 2500 mm

Versions

Type	Material	Standard	Weight [kg]	Part No.	**Article No.**
CC 397	Cast steel housing	~EN 284	8.2	905.397.101	**204 048 000**

~ similar EN 284

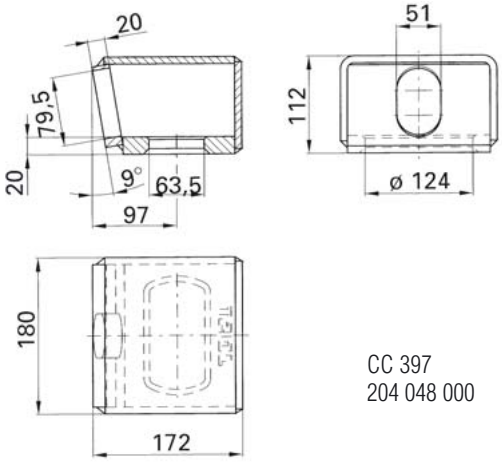

CC 397
204 048 000

The technical specifications contained in this brochure are approximate and no guarantee is given as to their accuracy. Designs are subject to change.

Interchangeable flatbed with a vehicle width of 2500 mm

Versions

Type	Material	Standard	Weight [kg]	Part No.	**Article No.**
CW 7454	Sheet steel housing	~EN 284	8.5	905.454.000	**204 045 000**

~ similar EN 284

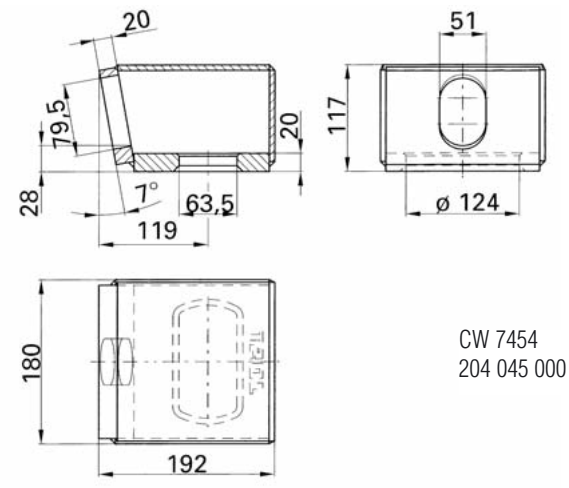

CW 7454
204 045 000

For freight containers in accordance with ISO 1161

Versions

Pos.	Type	Material	Stan-dard	Weight [kg]	Part No.	**Article No.**
D	CC 297 TL	Cast steel housing	ISO 1161	11.0	905.297.000	**204 040 000**
C	CC 298 TR	Cast steel housing	ISO 1161	11.0	905.298.000	**204 041 000**
B	CC 299 BL	Cast steel housing	ISO 1161	11.0	905.299.000	**204 042 000**
A	CC 300 BR	Cast steel housing	ISO 1161	11.0	905.300.000	**204 043 000**

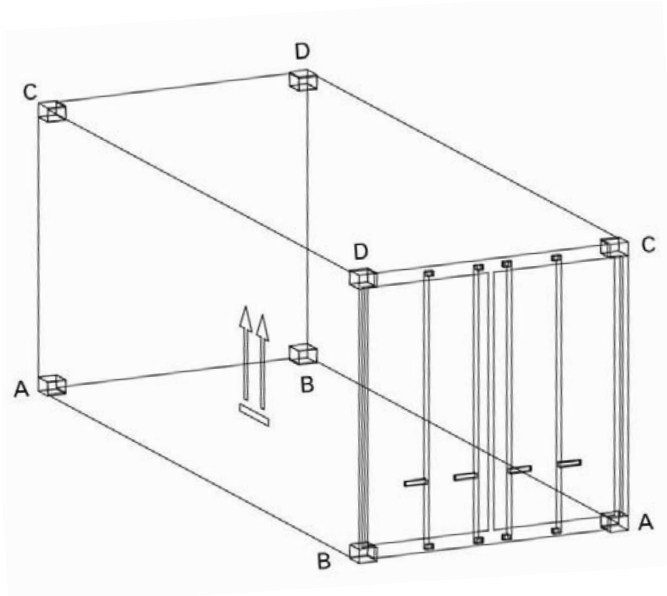

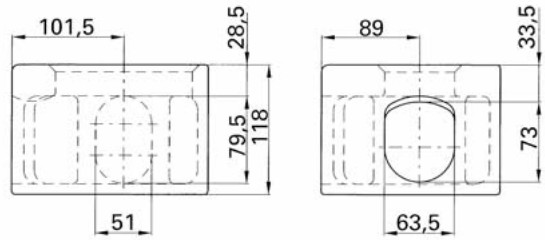

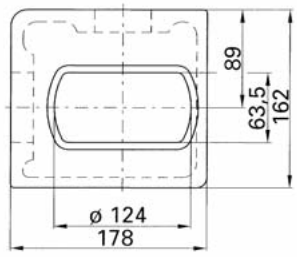

CC 297 TL
204 040 000

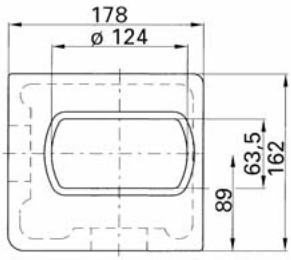

CC 299 BL
204 042 000

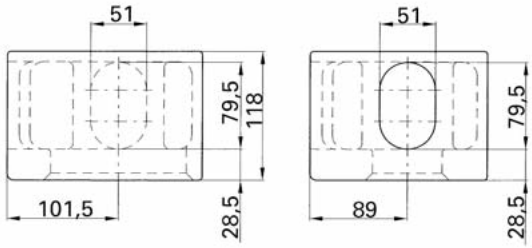

The technical specifications contained in this brochure are approximate and no guarantee is given as to their accuracy. Designs are subject to change.

Corner casting

For special designs

Versions

Type	Material	Standard	Weight [kg]	Part No.	**Article No.**
CC 012	Cast steel housing	–	4.0	905.074.000	**204 051 000**
CC 320	Cast steel housing	–	2.2	640.001.055	**204 027 000**

** For a max. swap body width of 2390 mm and a floor opening not in accordance with ISO. Only for use in conjunction with F 10 SK and VA 11 SK locks.*

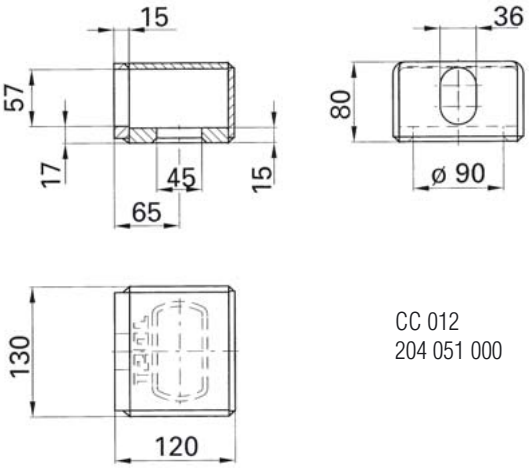

CC 012
204 051 000

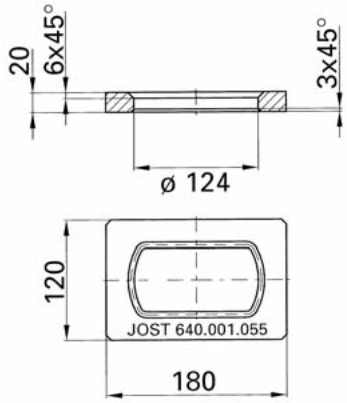

CC 320
204 027 000

Cross members and twist locks

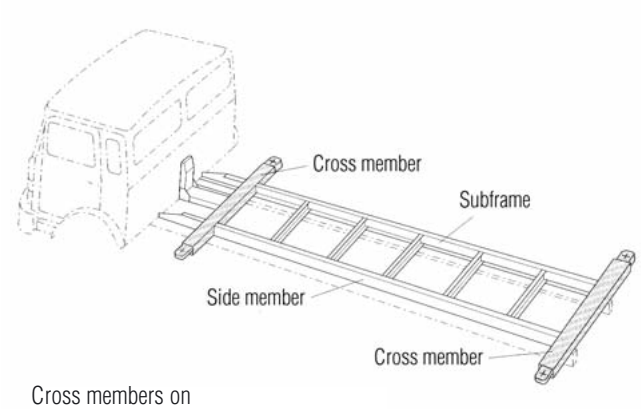

Cross members on interchangeable vehicle

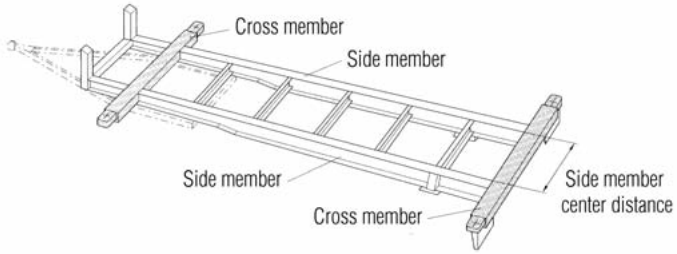

Cross members on swap body vehicle

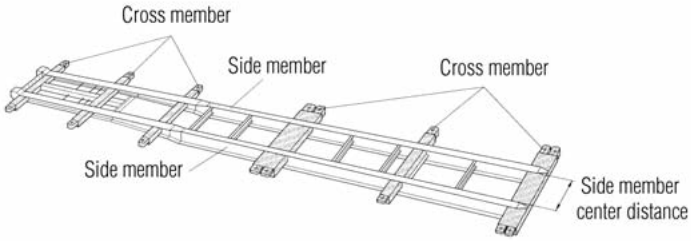

Cross members on container chassis

Twist locks on the standard vehicle container chassis

Recommended versions

Pos.	Version	Type	**Article No.**
A/C	Permanently protruding lock	F 02 SK - R	**204 077 000**
		R 402 F - R	
		R 434 F	
A		F 17 SKA - 70	**204 081 000**
B	Lowerable lock	VA 01 SK	**204 070 000**
		R 401 VAK	**204 089 000**
		R 436 VAK	**204 085 000**

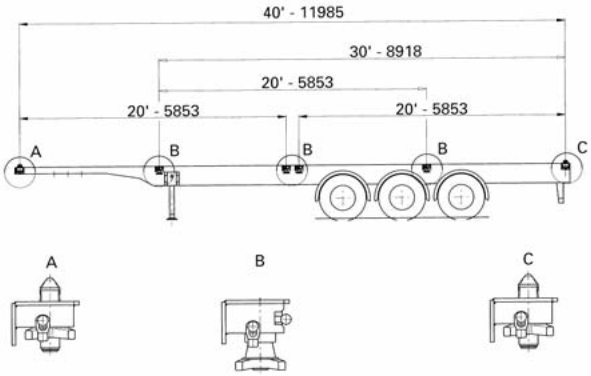

Installation example

Twist locks and height adjustment on the gooseneck chassis

Recommended versions

Pos	Version	Type	**Article No.**
A	Swivel locking bar, standard	FB 88-14V	–
B	Retractable lock, heavy duty	R 401 VAK	**204 089 000**
	Retractable lock, standard version	R 436 VAK	**204 085 000**
	–	VA 01 SK	**204 070 000**
C / D	Height adjuster repluggable, weight-optimised	HV 120 V	**204 146 000**
			204 147 000

For parts without part numbers, detailed technical documentation will be willingly provided on request.

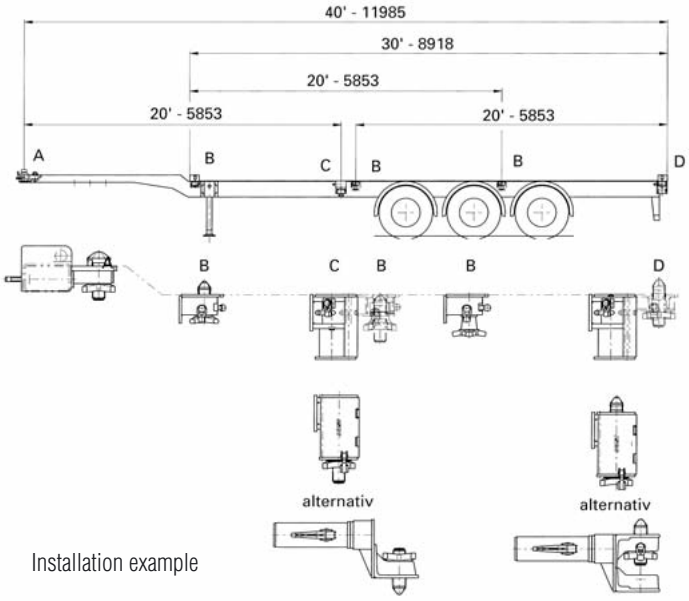

Installation example

The technical specifications contained in this brochure are approximate and no guarantee is given as to their accuracy. Designs are subject to change.

Phone: +49 (0)5 41/58 22-0 Fax: +49 (0)5 41/58 22-9910 email: export@titgemeyer.com

Cross members and twist locks

Model index

Type	Part No.	Back plate [mm]	Gauge [mm]	Vehicle type[3]	Corner castings[4]	Weight approx. [kg/each]	**Article No.**
Lowerable, tensions							
VA 01 SK	905.207.000	180 x 140	105	2	5	15.0	**204 070 000**
R 301 VA[2]	905.222.000	–	95	(2). 3. 4	5	13.5	**–**
R 401 VAK	905.294.000	180 x 120	105	(2)	5	15.5	**204 089 000**
R 304 VA[2]	905.243.000	–	95	(2). 3. 4	5	11.5	**–**
R 405 VAK	905.319.000	180 x 120	105	3. 4	5	11.0	**204 072 000**
R 405 VAN	905.400.000	180 x 70	105	3. 4	5	10.0	**–**
R 316 VA[2]	905.198.000	–	72	(2)	6	8.5	**204 074 000**
R 416 VAK	905.248.000	180 x 120	80	(2)	6	10.0	**–**
R 336 VA[2]	905.353.000	–	95	(2). 3. 4	6	10.0	**–**
R 436 VAK	905.346.000	180 x 120	105	(2)	6	11.5	**204 085 000**
R 1018 VAR[1]	905.429.010	180 x 130	105	(2)	6	12.0	**–**
R 1018 VAL[1]	905.429.020	180 x 130	105	(2)	6	12.0	**–**
R 306 VA[2]	905.315.000	–	95	3. 4	6	8.5	**–**
R 406 VAK	905.317.000	180 x 120	105	3. 4	6	10.0	**204 083 000**
VA 11 SK	905.352.000	150 x 95	105	3. 4	7	8.0	**204 080 000**
R 411 VAK-R	905.330.000	150 x 95	105	3. 4	7	8.0	**–**
R 316 VAP[2]	905.202.000	–	75	1	6	13.5	**204 075 000**
R 305 VAP[2]	905.295.000	–	75	1	5	14.0	**–**
Not lowerable, tensions							
F 02 SK - KN	905.063.000	180 x 140	105	2	5	13.5	**204 076 000**
F 02 SK - R	905.162.000	180 x 140	105	2	5	13.5	**204 077 000**
R 302 F - KN[2]	905.215.000	–	95	2	5	12.0	**–**
R 302 F - R[2]	905.281.000	–	95	2	5	12.0	**–**
R 402 F - KN	905.233.000	180 x 120	105	2	5	13.5	**–**
R 402 F - R	905.282.000	180 x 120	105	2	5	13.5	**–**
FD 02 SK - KN	905.178.000	180 x 140	105	2	5	14.0	**–**
FD 02 SK - R	905.165.000	180 x 140	105	2	5	14.0	**–**
F 14 SK - R	905.111.000	180 x 120	80	2	6	9.5	**–**
R 314 F[2]	905.199.000	–	72	2	6	9.0	**–**
R 414 F	905.234.000	180 x 120	80	2	6	10.5	**–**
R 334 F[2]	905.354.000	–	95	2	6	9.0	**–**
R 434 F	905.347.000	180 x 120	105	2	6	11.5	**–**
F 10 SK - RV	905.188.000	150 x 85	80	4	7	6.7	**204 079 000**

[1] *Lateral operation*
[2] *oWithout back plate*
[3] *1 = platform, 2 = Container-chassis, (2) = container-chassis only in centre position, 3 = interchangeable trailer, 4 = swap body vehicle*
[4] *5 = lock pin ISO ø 52 mm, 6 = lock pin ISO ø 38 mm, 7 = lock pin not ISO*

Articles, which are not stocked, are available at short term request.

The technical specifications contained in this brochure are approximate and no guarantee is given as to their accuracy. Designs are subject to change.

Cross members and twist locks

Twist lock type VA 01 SK lowerable
For container chassis, swap body trailers and swap body vehicles.
GGVS: TCB-certified for containers up to 30500 kg total weight
Lock pin ø 52 mm (ISO)
Material: Cast housingiron, high-strength welding
Weight: approx. 15.5 kg/each
Article No. 204 070 000

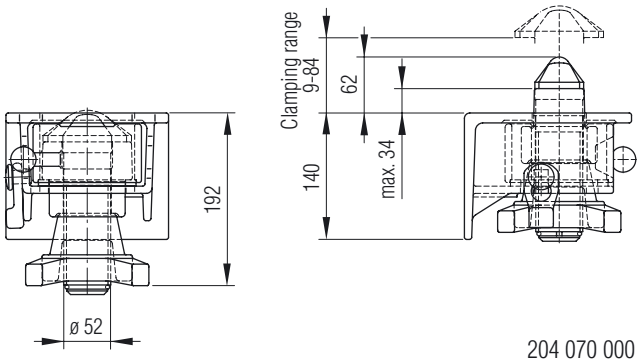

204 070 000

Alternatively without illustration
Twist lock type R 401 VAK lowerable
For container chassis in centre position, swap body trailers and swap body vehicles
Lock pin ø 52 mm (ISO)
Material: Sheet steel housing, welded
Weight: approx. 15.5 kg/each
Article No. 204 089 000

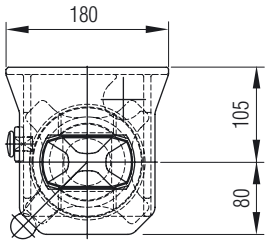

Attention:
Insignificant variations in dimension!
Please order separate drawing if needed.

Twist lock type R 316 VA lowerable
For swap body vehicles with welded sheet steel housing, without back plate, gauge 72 mm
Weight: approx. 9.2 kg/each
Article No. 204 074 000

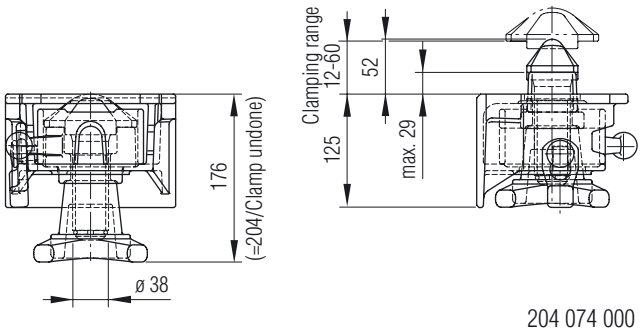

204 074 000

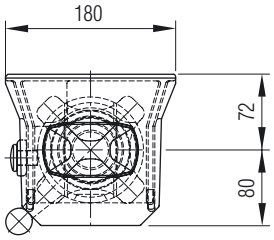

The technical specifications contained in this brochure are approximate and no guarantee is given as to their accuracy. Designs are subject to change.

TITGEMEYER Phone: +49 (0)5 41/58 22-0 Fax: +49 (0)5 41/58 22-9910 email: export@titgemeyer.com

Cross members and twist locks

Twist lock type R 405 VAK lowerable
For swap body trailers and swap body vehicles.
GGVS: TCB-certified for containers up to 24000 kg total weight
Lock pin ø 52 mm (ISO)
Material: Sheet steel housing, welded
Weight: approx. 11.0 kg/each
Article No. 204 072 000

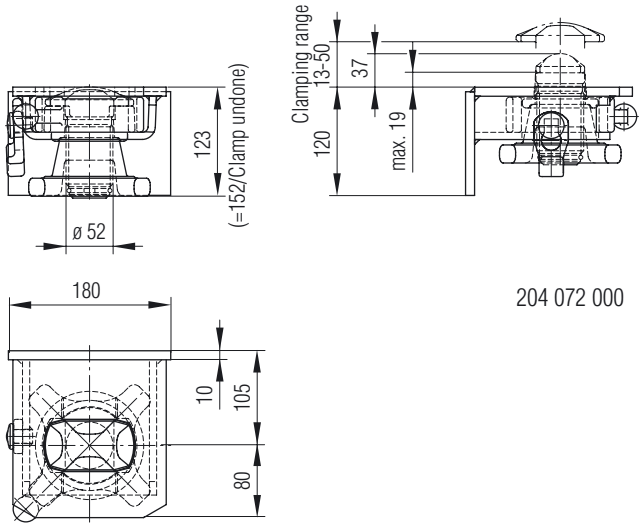

204 072 000

Twist lock type R 436 VAK lowerable
For container chassis, swap body trailers and swap body vehicles.
GGVS: TCB-certified for containers up to 24000 kg total weight
Lock pin ø 38 mm (ISO)
Material: Sheet steel housing, welded
Weight: approx. 11.5 kg/each
Article No. 204 085 000

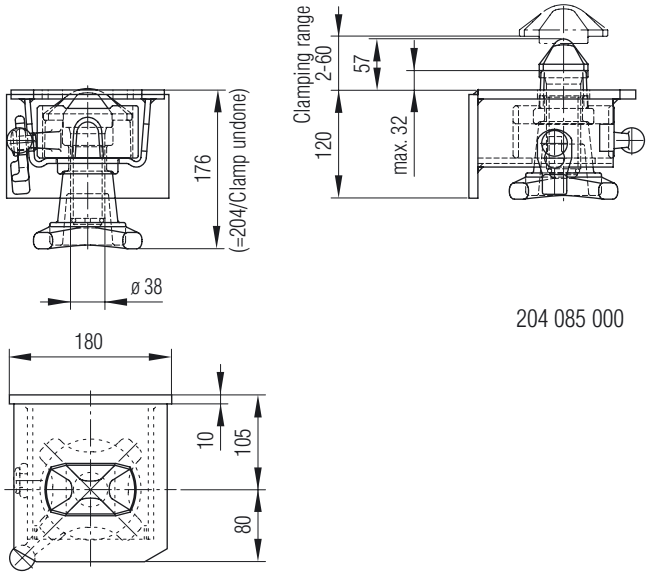

204 085 000

Twist lock type R 411 VAK lowerable, not ISO
For swap body trailers and swap body vehicles.
Lock pin ø 38 mm (not ISO)
Material: Sheet steel housing, welded
Weight: approx. 8.0 kg/each
Article No. 204 080 000

Note: The twist lock does not correspond to the directives of the Federal Ministry of Transport, since the ball safety device has no closure mold.
The application has to be examined individually.

This twist lock has been developed for the light construction method, for vehicles with a permitted total weight of approx. 9000 kg. The corner mounting of the light product line type CC 012, Artikle No. 204 051 000 belongs to this.

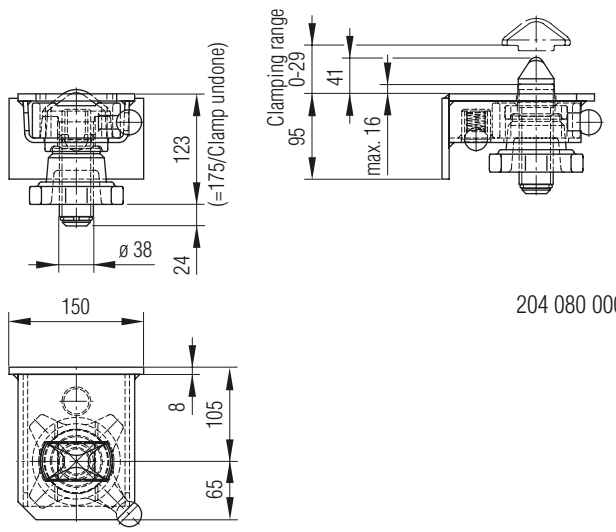

204 080 000

The technical specifications contained in this brochure are approximate and no guarantee is given as to their accuracy. Designs are subject to change.

Cross members and twist locks

Twist lock type R 406 VAK lowerable
For swap body trailers and swap body vehicles.
Lock pin ø 38 mm (ISO)
Material: Sheet steel housing, welded
Weight: approx. 11.6 kg/each
Article No. 204 083 000

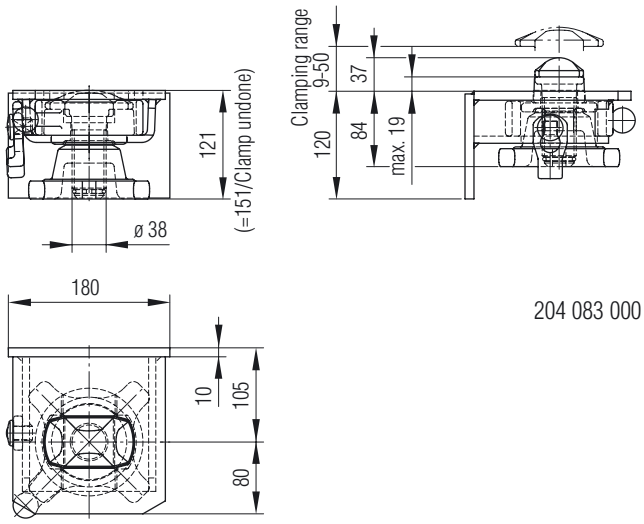

204 083 000

Twist lock type R 316 VAP lowerable
For platform
GGVS: TCB-certified for containers up to 24000 kg total weight.
Lock pin ø 38 mm (ISO)
Material: Sheet steel housing, welded
Weight: approx. 15.7 kg/each
Article No. 204 075 000

The twist lock does not correspond to the directives of the Federal Ministry of Transport, since the ball safety device has no closure mold. The application has to be examined individually.

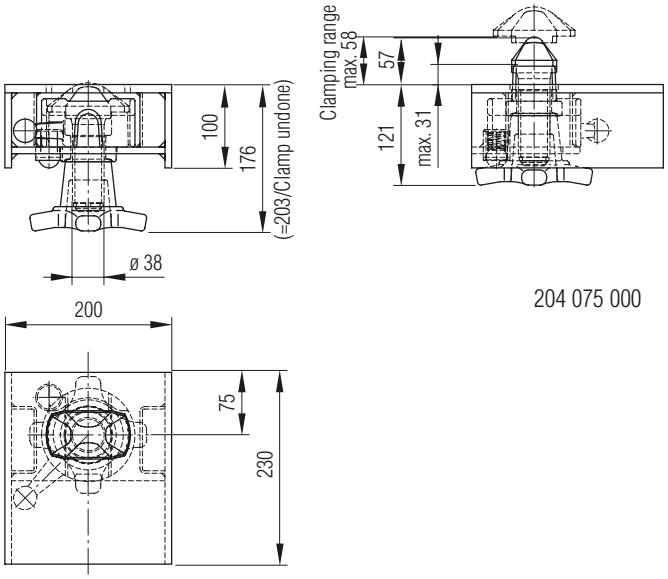

204 075 000

Cross members and twist locks

Twist lock type F 02 SK lowerable
For container chassis, tensionable
GGVS: TCB-certified for containers up to 30500 kg total weight
Lock pin ø 52 mm (ISO)
Material: Cast housingiron, high-strength welding
Weight: approx. 13.5 kg/each
Article No. 204 076 000 – KN – with clamp
204 077 000 – R – with ring

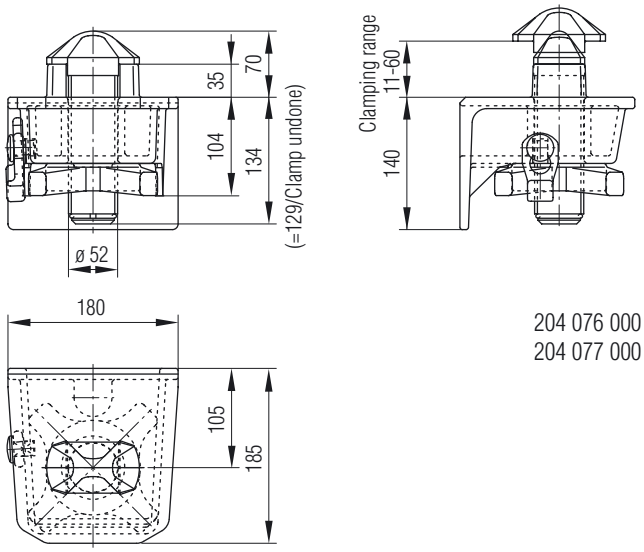

204 076 000
204 077 000

Twist lock type F 10 SK not lowerable, not ISO
For container chassis, tensionable
Lock pin Ø 38 mm (not ISO)
Material: Cast housingiron, high-strength welding
Weight: approx. 7.0 kg/each
Article No. 204 079 000 – with ring

Note:
The twist lock does not correspond to the directives of the Federal Ministry of Transport, since the ball safety device has no closure mold. The application has to be examined individually.

This twist lock has been developed for the light construction method, for vehicles with a permitted total weight of approx. 9000 kg. The corner mounting of the light product line type CW 7012, Artikle No. 204 051 000 belongs to this.

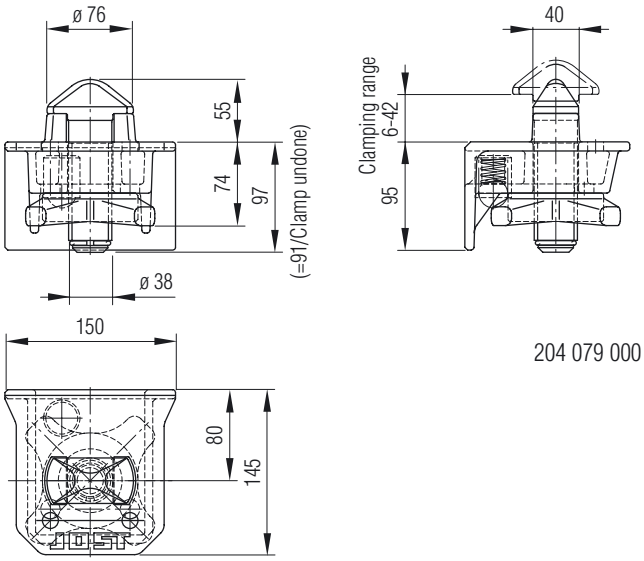

204 079 000

Cross members and twist locks

Cross members (QT)

To receive interchangeable tanks or containers
QT 160 up to max. 18000 kg total weight,
QT 200 up to max. 32.000 kg total weight
in dependence of the mid-distance of the vehicle frame main girder
Material: QT-types: Steel, black primed
(welded, closed box profile,
flattened toboth sides)
All assembly components electro galvanised

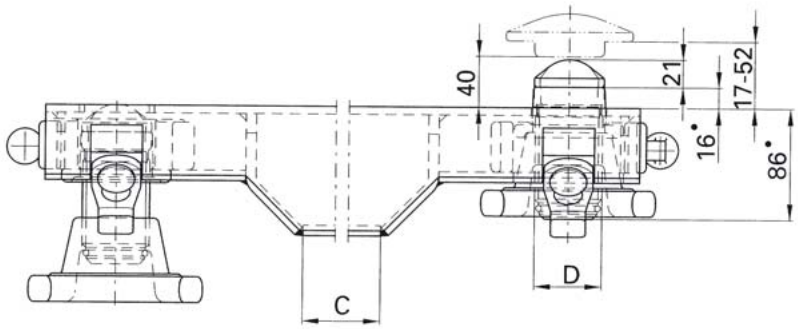

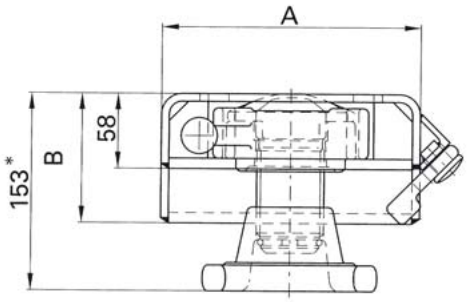

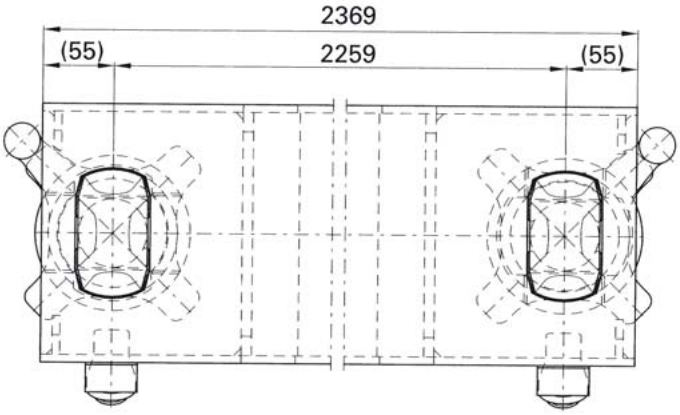

* Clamping nut, unfastened; tensioned = 123
• Dimensions shown are for when nut is ready to clamp

Cross member (QT) types

Type	Part No.	A [mm]	B [mm]	C approx. [mm]	D approx. [mm]	Twist lock type	Weight approx. [kg/each]	**Article No.**
Lowerable twist locks								
QT 160-80V	410.150.000	160	80	2000	52	R 405 VAK, galvanised, unmounted	62.5	**204 095 010**
QT 200V	410.081.000	200	100	1970	52	R 405 VAK, galvanised, unmounted	76.2	**204 096 010**

The technical specifications contained in this brochure are approximate and no guarantee is given as to their accuracy. Designs are subject to change.

Cross members and twist locks

Combination beams (cross-members)
with welded-on bearings, galvanised guide rollers and twist lock
To receive interchangeable tanks or containers
QT 160 up to max. 18000 kg total weight,
QT 200 up to max. 32.000 kg total weight
in dependence of the mid-distance of the vehicle frame main girder
Material: QT-160-80 RV an QT 200 RV - Steel, black primed
QT 160-80 RVX - Steel, raw (welded, closed box profile, flattened toboth sides)
All assembly components electro galvanised

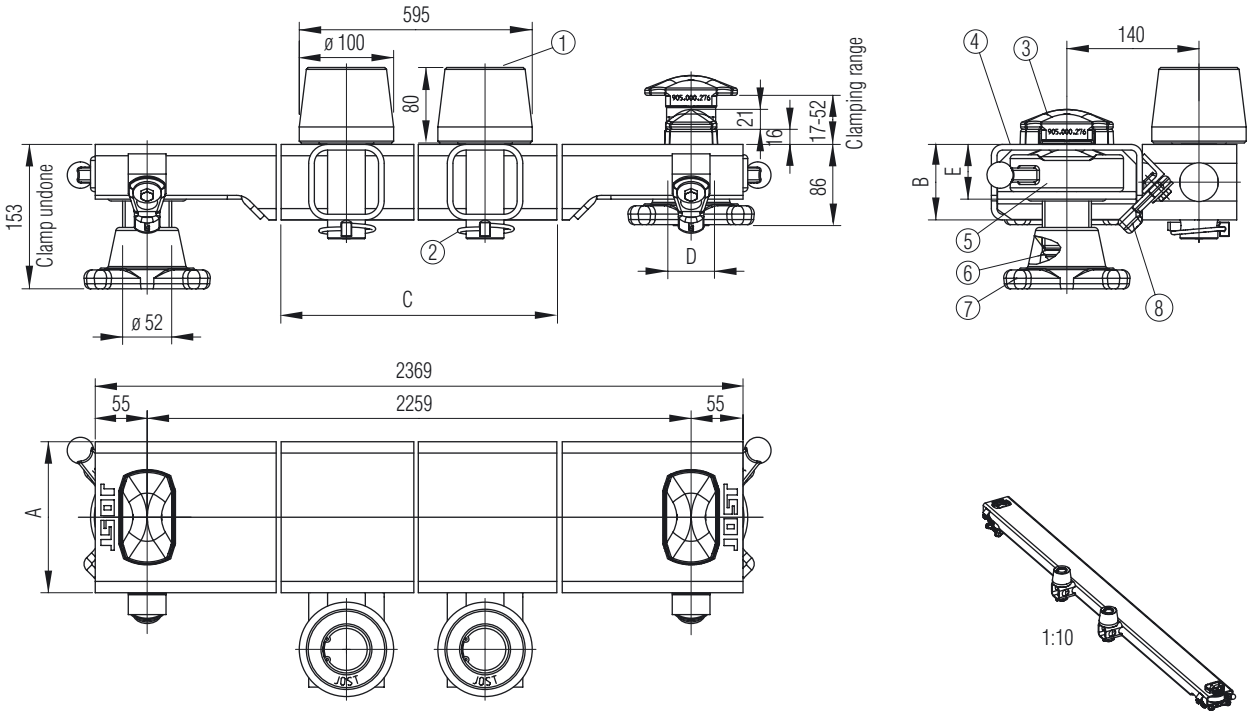

Type	Part No.	A [mm]	B approx. [mm]	C [mm]	D ø [mm]	E [mm]	F [mm]	Twist lock type	Weight approx. [kg/each]	**Article No.**
QT 160-80 RV	410.151.000	160	80	2000	52	58	140	R 405 VAK. galvanised, unmounted	74.8	**204 108 010**
QT 160-80 RVX	–	160	80	2000	52	58	140	R 405 VAK. galvanised, unmounted	74.8	**204 108 011**
QT 200 RV	410.139.000	200	100	1970	52	58	160	R 405 VAK. galvanised, unmounted	88.7	**204 111 010**

Spare parts for cross-member
(QT 160-80 RV, QT 160-80 RVX and QT 200 RV, QT 160-80V, QT 200V, QT HV200-05)

Pos.	Description	**Article No.**
1	Guide roller	**204 024 000**
2	Cotter pin	**204 024 001**
3	Centre pin	**204 302 000**
4	Guide bushing	**204 303 000**
5	Grooved bushing	**204 304 000**

Pos.	Description	**Article No.**
6	Snap ring	**204 306 000**
7	Clamping nut	**204 305 000**
8	Latch hook kit QT 160	**204 314 000**
9	Latch hook kit QT 200	**204 310 000**

The technical specifications contained in this brochure are approximate and no guarantee is given as to their accuracy. Designs are subject to change.

Cross members and twist locks

Cross-member with height adjuster QT HV 200-05

Cross-member with integrated height adjuster (up to 200 mm) using rotating locking heads.
QT HV 200-05 max. total weight 18,000 kg
Material: QT HV 200-05 – Steel, black, primed
All mounting components electro-galvanised

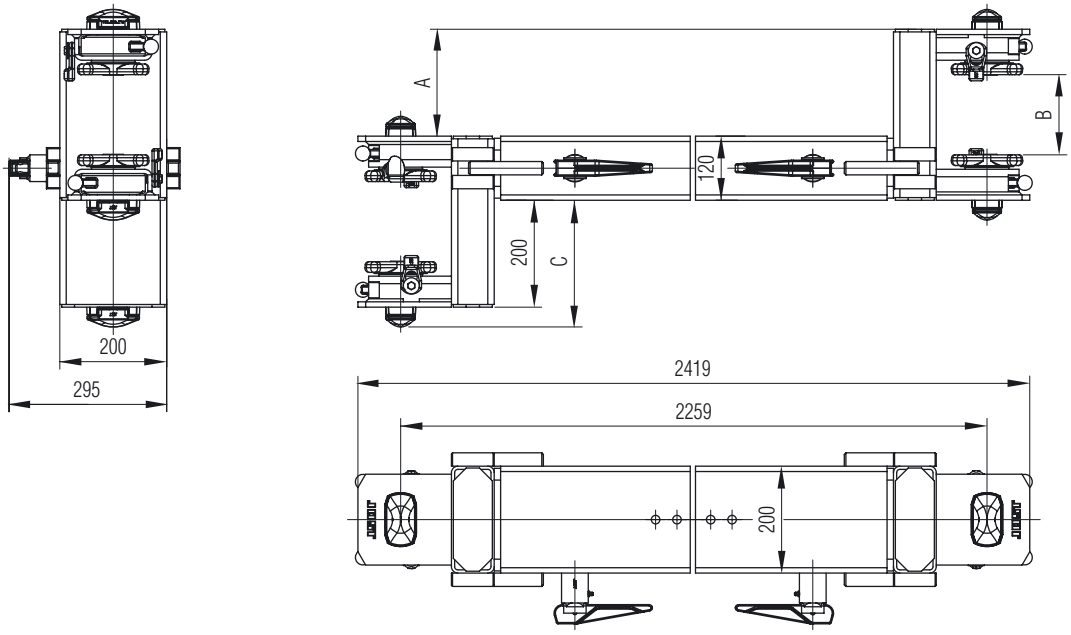

Type	Part No.	A [mm]	B approx. [mm]	C [mm]	Twist lock type	Weight approx. [kg/each]	**Article No.**
QT HV 200-05	410.200.000	200	150	237	R 405 VAK, galvanised, unmounted	143.2	**204 113 010**

The technical specifications contained in this brochure are approximate and no guarantee is given as to their accuracy. Designs are subject to change.

Cross members and twist locks

Twist lock height adjustment

Model HVC. for interchangeable chassis, max gross container weight dependent upon selected form of twist lock: max. 34000 kg
Dimension A: Twist lock gauge for bore holes
Dimension B: Cross member's blank size
Delivery specification: without twist lock
Material: Steel, weldable

Type	X [mm]	Y [mm]	Weight approx. [kg]	Article No. left	Article No. right
HVC 80 L/R	80	194	23.0	**204 142 000**	**204 143 000**
HVC 100 L/R	100	234	25.5	**204 144 000**	**204 145 000**
HVC 120 L/R	120	274	28.0	**204 146 000**	**204 147 000**
HVC 160 L/R	160	314	30.5	**204 156 000**	**204 157 000**
HVC 200 L/R	200	354	32.0	**204 150 000**	**204 151 000**
HVC 220 L/R	220	374	33.0	**204 158 000**	**204 159 000**
HVC 250 L/R	250	404	34.0	**204 152 000**	**204 153 000**
HVC 280 L/R	280	434	35.2	**204 160 000**	**204 161 000**

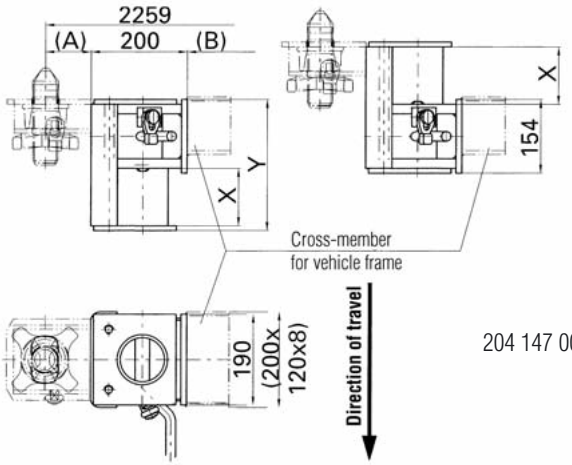

204 147 000

Twist lock height adjuster
Three adjustable heights

Type HVC 001 R/L
For swap body vehicles/trailers with varying parking heights (Jumbo containers), max. gross container weight depending on the selected twist lock: max. 16,000 kg
Part No. 905.508.010/020
Delivery specification: without twist lock
Material: Steel
Weight: approx. 40.0 kg/each
Article No. 204 162 000 – left
204 163 000 – right

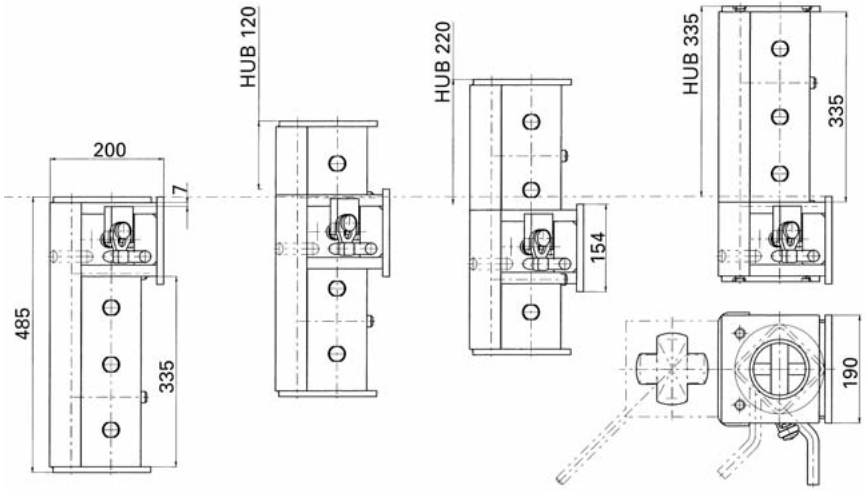

right version

Cross members and twist locks

Height adjuster for twist locks

Model HVC (dismantles if required), fully assembled ready for installation
R 305 VA and mounting plate

Housing: Hot dip galvanized
Assembly parts: Electro galvanised, fitted
Use: Swap body vehicles/ trailers

Type	X [mm]	Y [mm]	Weight approx. [kg]	**Article No.**
R 305HVCRZ120	120	304	48.9	**204 147 100**
R 305HVCLZ120	120	304	48.9	**204 146 100**
R 305HVCRZ160	160	344	49.7	**204 157 100**
R 305HVCLZ160	160	344	49.7	**204 156 100**
R 305HVCRZ200	200	384	51.2	**204 151 100**
R 305HVCLZ200	200	384	51.2	**204 150 100**

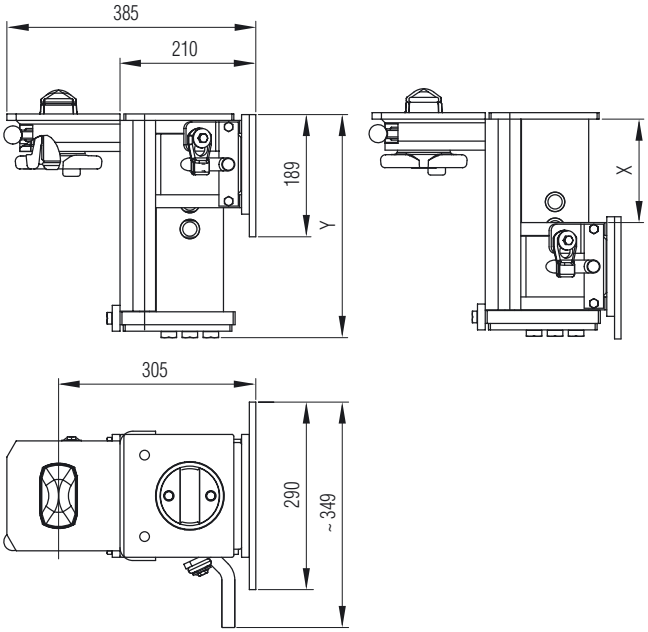

The technical specifications contained in this brochure are approximate and no guarantee is given as to their accuracy. Designs are subject to change.

20.01.03.12
Winches
Swap body components
Cross members and twist locks

Lifting arms
Pneumatic lifting and lowering device for partially pneumatically sprung and leaf spring interchangeable vehicles and swap body trailers, also as additional device for pneumatically sprung jumbo vehicles.

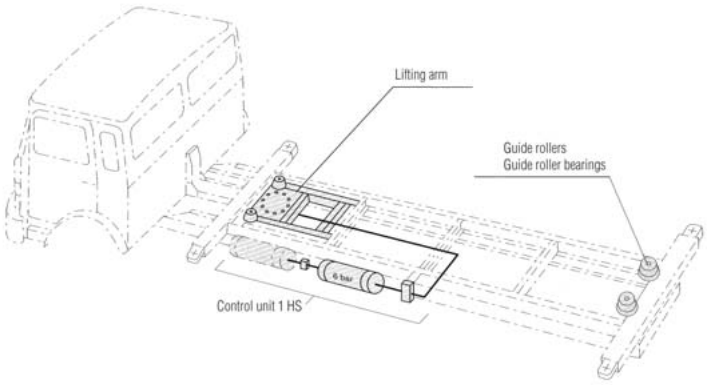

Partially pneumatically sprung

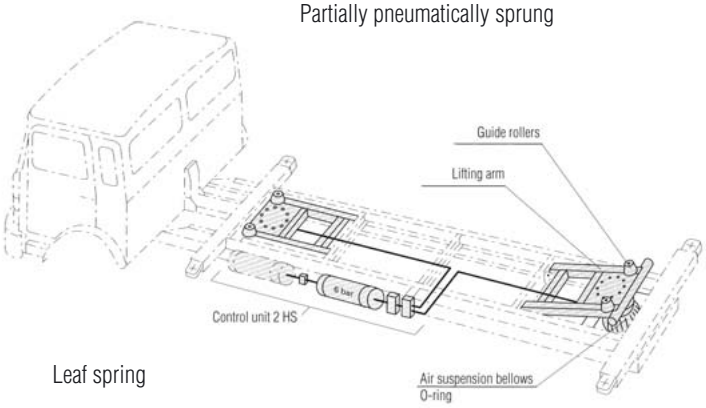

Leaf spring

Model overview

Type	Stroke load[1] [kg]	Guide rollers upper	Guide rollers lateral	Stroke height [mm]	Total lenght [mm]	Part No.	Weight approx. [kg]	**Article No.[2]**
HS 5000 EO	50	•	–	280	1288	650.002.000	100	**204 124 000**
HS 5000 ESN	50	–	•	280	1365	650.076.000	105	**204 128 000**
HS 8000 EO	80	•	–	300	1560	650.007.000	146	**204 130 000**
HS 8000 ES	80	–	•	300	1580	650.011.000	134	**204 132 000**
HS 8000 ESN	80	–	•	300	1570	650.014.000	160	**204 134 000**
HS 10000 EO	100	•	–	400	1605	650.021.000	160	**204 120 000**
HS 10000 ES	100	–	•	400	1605	650.017.000	147	**204 121 000**

[1] *At pressure of 0.6 Mps (6 bar)*
[2] *If Artikle No. not given, please state Part No.*

Technical data, dimensions, etc., see following pages.

The technical specifications contained in this brochure are approximate and no guarantee is given as to their accuracy. Designs are subject to change.

Phone: +49 (0)5 41/58 22-0 Fax: +49 (0)5 41/58 22-9910 email: export@titgemeyer.com

Lifting arms

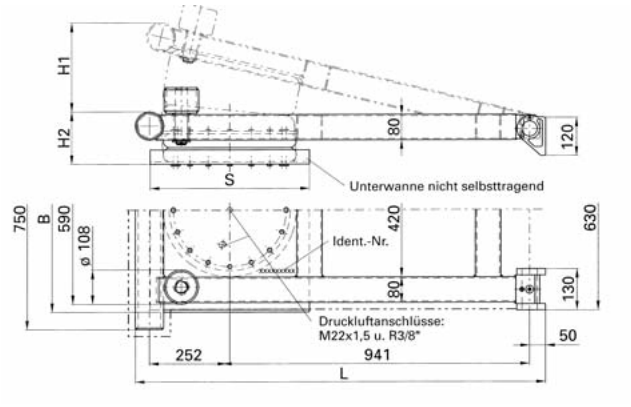

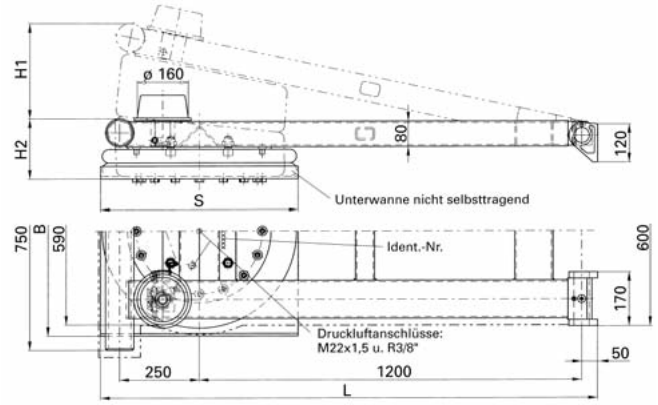

204 124 000

204 130 000
204 120 000

Product line HS 5000/8000/10000 EO

Type	Stroke load [kN]	Stroke [mm]	H1 [mm]	H2 [mm]	S [mm]	L [mm]	B [mm]	Part No.	Weight [kg]	**Article No.**
HS 5000 EO	50	280	280	165	500	1288	640	650.002.000	100	**204 124 000**
HS 8000 EO	80	300	300	190	620	1560	660	650.007.000	146	**204 130 000**
HS 10000 EO	100	400	400	200	710	1605	740	650.021.000	160	**204 120 000**

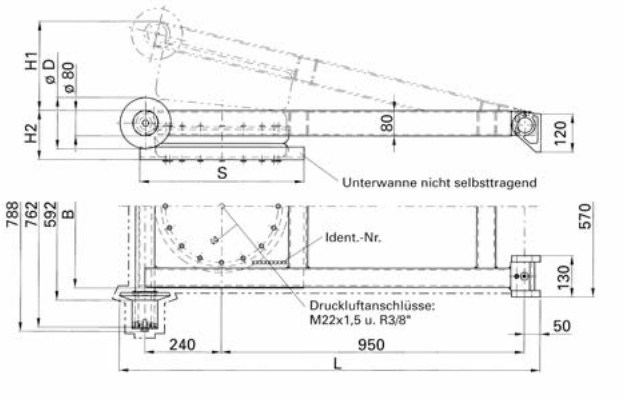

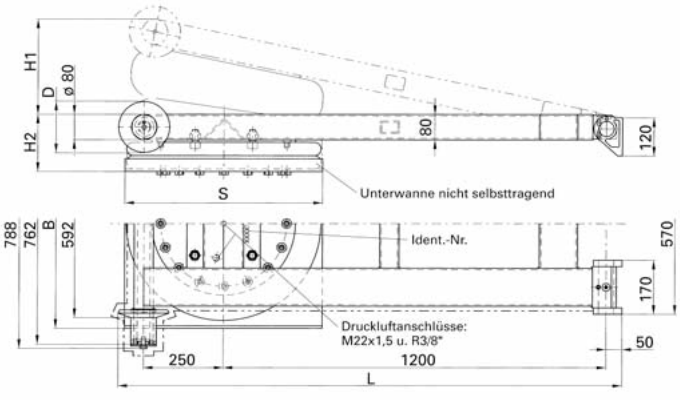

204 127 000

204 132 000
204 121 000

Product line HS 5000/8000/10000 ES

Type	Stroke load [kN]	Stroke [mm]	H1 [mm]	H2 [mm]	S [mm]	L [mm]	B [mm]	D [mm]	Part No.	Weight [kg]	**Article No.**
HS 8000 ES	80	300	300	180	620	1580	660	ø 160	650.011.000	134	**204 132 000**
HS 10000 ES	100	400	400	195	710	1605	740	ø 140	650.017.000	147	**204 121 000**

The technical specifications contained in this brochure are approximate and no guarantee is given as to their accuracy. Designs are subject to change.

Lifting arms

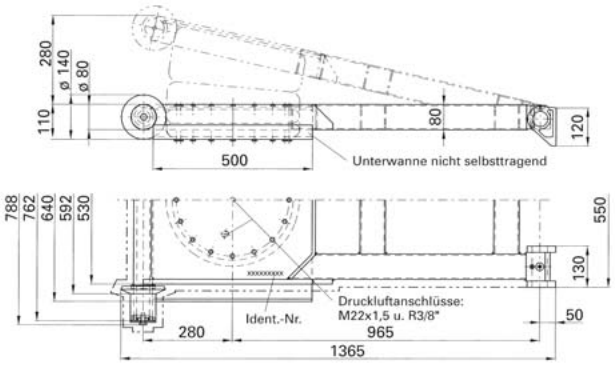

204 128 000

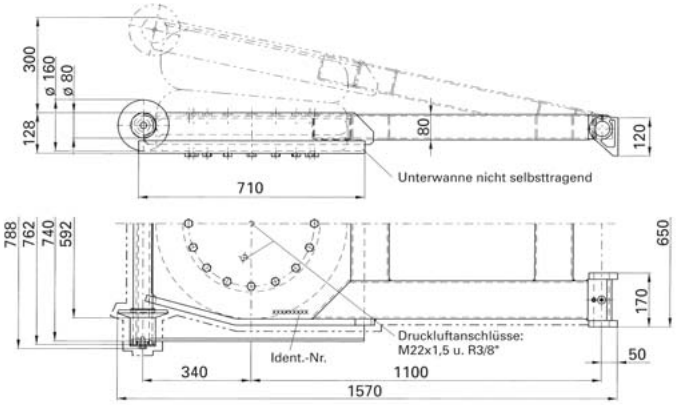

204 134 000

Product line HS 5000/8000 ESN

Type	Stroke load [kN]	Stroke [mm]	Part No.	Weight [kg]	**Article No.**
HS 5000 ESN	50	280	650.076.000	105	**204 128 000**
HS 8000 ESN	80	300	650.014.000	160	**204 134 000**

The technical specifications contained in this brochure are approximate and no guarantee is given as to their accuracy. Designs are subject to change.

Phone: +49 (0)5 41/58 22-0 Fax: +49 (0)5 41/58 22-9910 email: export@titgemeyer.com

Lifting arms

Steering mechanism
Complete with mountings and plastic tube

Steering mechanism SSTA
Safety steering with spring return movement,
correspond to the rules for the prevention of accidents
and the demand of the trade co-operative association
Article No. 204 102 000 – 1 HS – for one lifting lever
204 103 000 – 2 HS – for double lifting arms

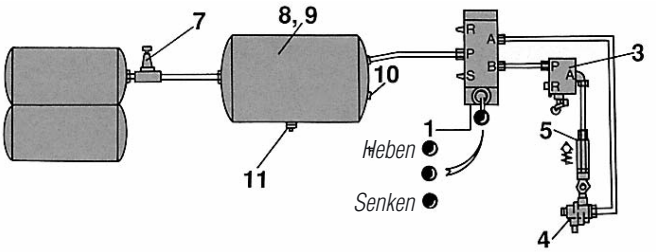

204 102 000

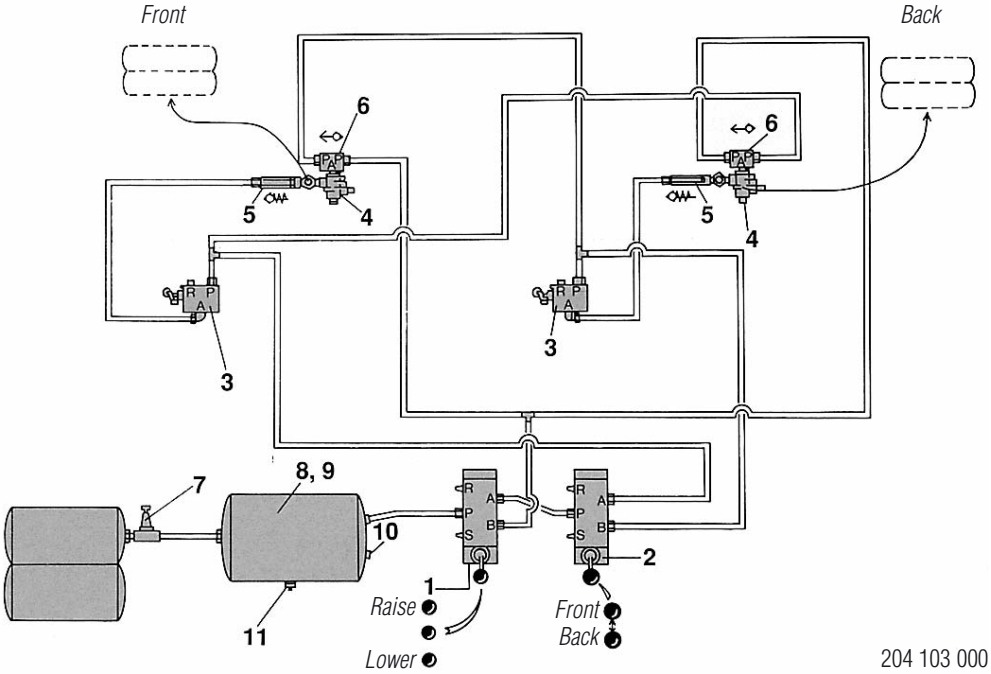

204 103 000

Part list of the extent of supply

Pos.	Number of lifting arms	Part No.	1	2	Weight approx. [kg/each]	Article No.
1	5/3 directional valve, spring reset	650.160.002	1	1	–	–
2	5/2 directional valve, hold-open device	650.160.003	–	1	–	–
3	3/2 directional valve, roller	650.160.004	1	2	–	–
4	2/2 directional valve	650.160.005	1	2	–	–
5	Return valve	650.160.007	1	2	–	–
6	Shuttle valve	650.160.006	–	2	–	–
Special accessories						
7	Spill valve	650.140.001	1	1	0.37	**182 556 000**
8	Air vessel, 60 l	650.140.002	1	1	5.70	**182 936 002**
9	Tightening strap	650.140.003	2	2	0.98	**183 014 000**
10	Testing connection	650.140.005	1	1	–	–
11	Drain valve	650.140.004	1	1	0.05	**182 572 000**

The technical specifications contained in this brochure are approximate and no guarantee is given as to their accuracy. Designs are subject to change.

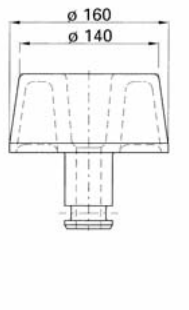

204 029 000

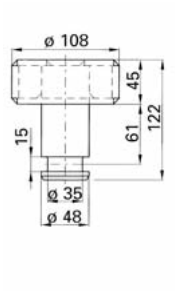

204 006 000

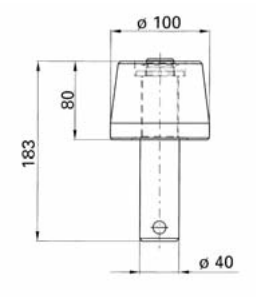

204 024 000

Guide rollers

Type	Version	Material	Part No.	Weight approx. [kg]	**Article No.**
ER 160 GOR	Without edge	Stahl	655.002.016	5.7	**204 029 000**
ER 108 N	Lower guide slot	Stahl	650.002.042	2.9	**204 006 000**
ER 100-85	Small shape	Stahl	650.002.054	4.5	**204 024 000**

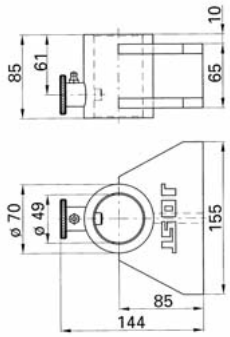

204 031 000

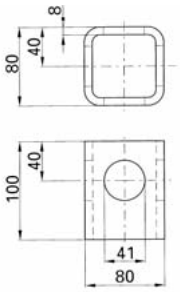

204 025 000

Bearings for guide rollers

Type	Suitable for pin ø on the guide rollers [mm]	Part No.	Weight approx. [kg]	**Article No.**
LER 160	48	650.000.039	1.9	**204 031 000**
LER 100	40	650.000.055	1.5	**204 025 000**

The technical specifications contained in this brochure are approximate and no guarantee is given as to their accuracy. Designs are subject to change.

Phone: +49 (0)5 41/58 22-0 Fax: +49 (0)5 41/58 22-9910 email: export@titgemeyer.com

Accessorie

Anti-theft protection DS 300
For protection of swap bodies.
Fitted in the locking opening on the corner casting.
Lock pin: ø 38 mm (ISO)
Quality cylinder lock, dust and water-proof
Part No. 905.406.000
Material: Steel, primed
Weight: approx. 7.0 kg/each
Article No. 204 176 000

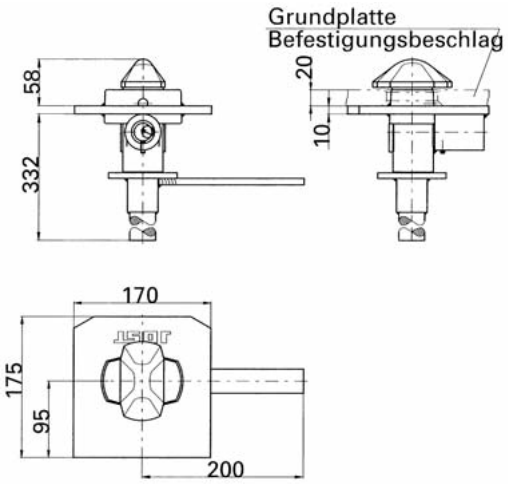

Operating wrench universal
Universal locking wrench to fasten and to release the container twist locks with large star nut. Easy to handle and noise-reduced working through closure of mold, auitable for all twist locks apart from Type R 305 VAP/R 316 VAP
Material: Steel
Weight: approx. 2.0 kg/each
Article No. 204 068 000

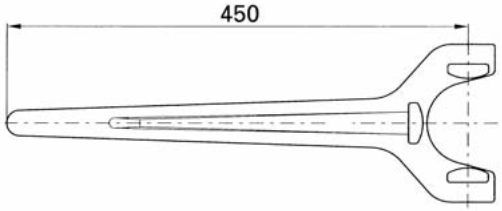

The technical specifications contained in this brochure are approximate and no guarantee is given as to their accuracy. Designs are subject to change.

Front stops, folded down to the side
Stop for swap bodies

- Universal version
- Adjustable
- Strong, robust design

Of universal application for all sizes of interchangeable containers. Very straightforward adjustment and locking features due to spring locking bolts.
By folding the stop tube down to the side, vehicle can be driven underneath containers on supports without problems.
The low height of the guide profile facilitates attachment underneath the top edge of the container fastening.
There are thus no projecting parts.

Material: Steel, black primed
Weight: approx. 34.0kg/each
Article No. 207 858 005

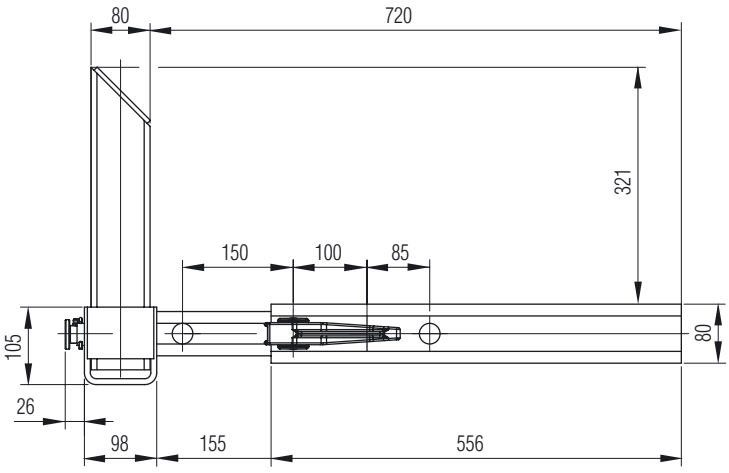

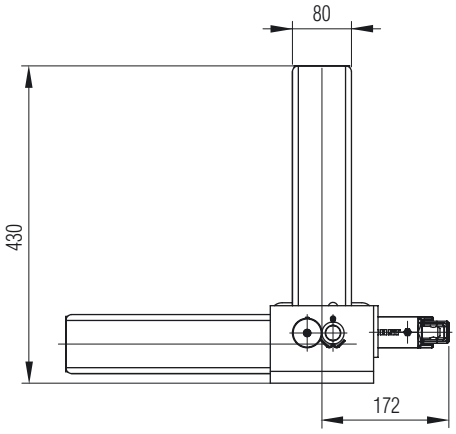

The technical specifications contained in this brochure are approximate and no guarantee is given as to their accuracy. Designs are subject to change.

Accessorie

Front stop, rigid version
Stop for swap body

- For universal use
- Adjustable
- Sturdy, robust design

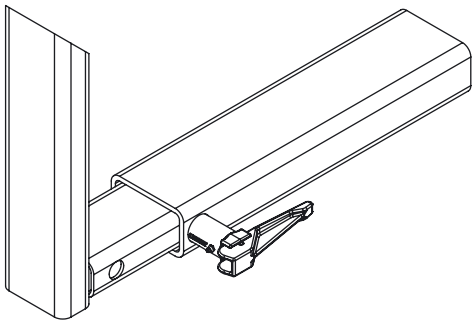

Universally usable on all swap body sizes.
Locking bar for very easy adjusting and locking.

Material: Steel, black primed - Article No. 207 857 005
Steel, raw - Article No. 207 857 015
Weight: approx. 27.0 kg/piece
Article No. 207 857 005 – Steel, primed
207 857 015 – Steel, raw

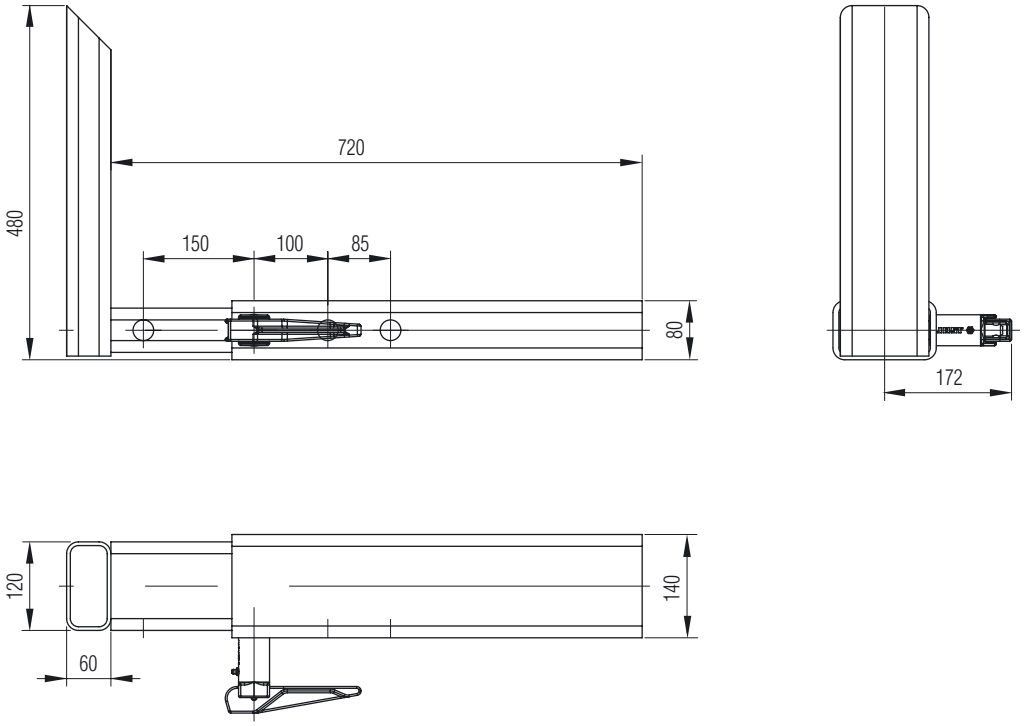

The technical specifications contained in this brochure are approximate and no guarantee is given as to their accuracy. Designs are subject to change.

HAACON S 2000 Plus landing legs

Lifting capacity: 24000 kg
Vertical load: 50000 kg
Lifting per crank turn:
– Low gear: 1.0 mm
– High gear: 20.0 mm
Back plate: full-length
Material: Steel
Surface: powder-coated
Surface colour: black

Scope of delivery:

1 supporting leg, gear driven
1 supporting leg, not gear driven
1 connecting shaft, 1564 mm

Not supplied:

1 crank handle kit* 350 mm	**Article No. 207 720 001**
1 crank handle kit* 445 mm	**Article No. 207 720 002**
1 crank handle kit* 525 mm	**Article No. 207 720 003**

** Comprises crank handle and crank hanger*

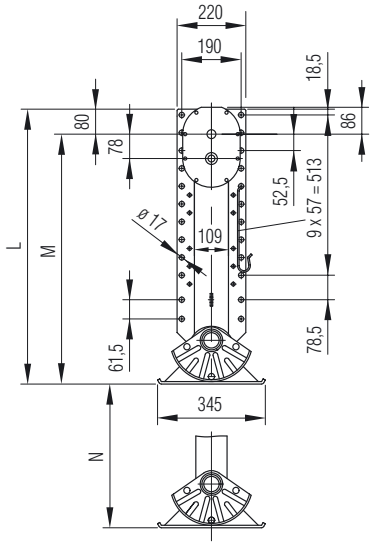

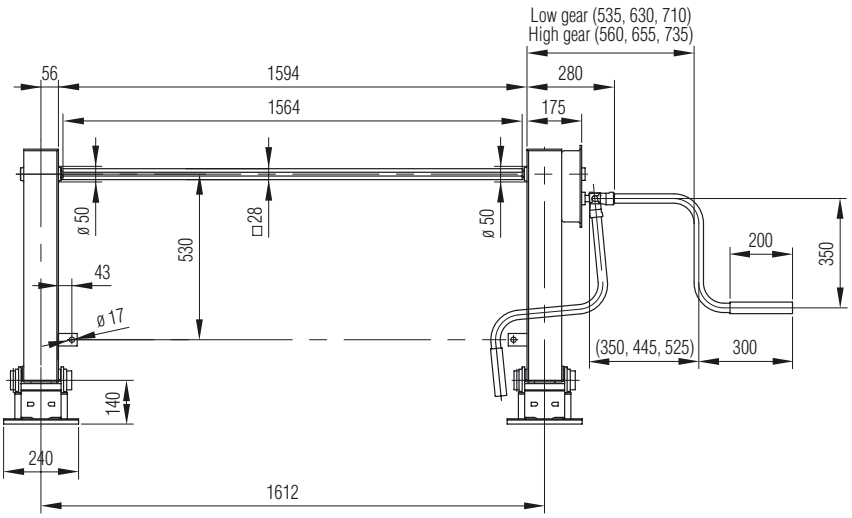

Overall height L [mm]	Mounting height M [mm]	Stroke N [mm]	Foot shape	**Article No.**
650	570	340	K	**207 713 010**
780	700	360	A	**207 708 010**
830	750	410	A	**207 715 010**
880	800	460	A	**207 714 010**
930	850	510	A	**207 716 010**

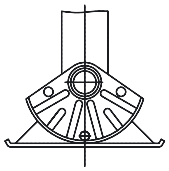
A-Foot

H-Foot

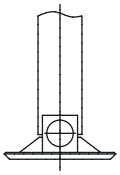
F-Foot

R-Foot

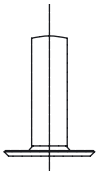
K-Foot

The technical specifications contained in this brochure are approximate and no guarantee is given as to their accuracy. Designs are subject to change.

Phone: +49 (0)5 41/58 22-0 Fax: +49 (0)5 41/58 22-9910 email: export@titgemeyer.com

Landing legs

HAACON landing legs for drawbar trailers

Lifting capacity: 12000 kg
Vertical load: 25000 kg
Lifting per crank turn:
– Low gear: 1.0 mm
– High gear: 20.0 mm
Back plate: full-length
Material: Steel
Surface: powder-coated
Surface colour: black

Scope of delivery:
1 supporting leg, gear driven
1 crank handle, L 250 mm

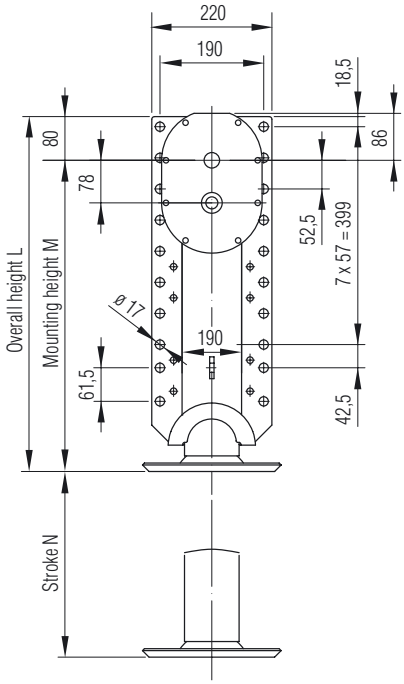

Overall height L [mm]	Mounting height M [mm]	Stroke N [mm]	Foot shape	**Article No.**
600	520	290	K	**207 771 003**
650	570	340	K	**207 771 002**
850	770	550	K	**207 771 000**

The technical specifications contained in this brochure are approximate and no guarantee is given as to their accuracy. Designs are subject to change.

Landing legs

JOST landing legs
Lifting capacity: 24000 kg
Vertical load: 50000 kg
Lifting per crank turn:
– Low gear: 0.9 mm
– High gear: 15.0 mm
Back plate: Double plate
Material: Steel
Surface: powder-coated
Surface colour: black

Mounting height M [mm]	Stroke N [mm]	Foot shape	**Article No.**
650	350	S	**207 845 010**
700	400	S	**207 844 010**
750	430	S	**207 843 010**
800	470	S	**207 842 010**
850	520	S	**207 841 010**

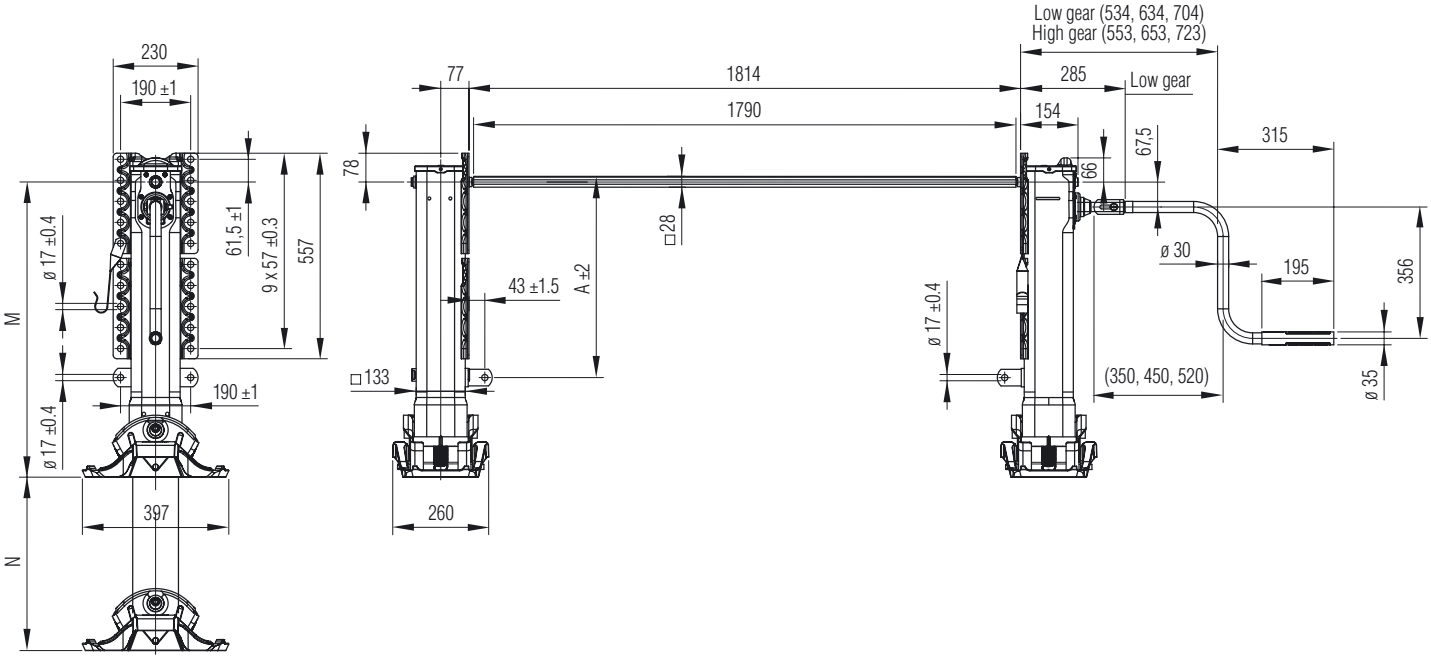

Scope of delivery:
1 supporting leg, gear driven
1 supporting leg, not gear driven
1 connecting shaft, 1790 mm

Not supplied:

1 crank handle kit* JSU 01 - 350 mm	**Article No. 207 851 003**
1 crank handle kit* JSU 03 - 450 mm	**Article No. 207 851 002**
1 crank handle kit* JSU 05 - 520 mm	**Article No. 207 851 011**

** Comprises crank handle and crank hanger*

S-Foot (standard)

A-Foot (compensating foot)

T-Foot (plate)

TC-Foot (plate low)

R-Foot (rolling)

The technical specifications contained in this brochure are approximate and no guarantee is given as to their accuracy. Designs are subject to change.

Landing legs

JOST landing legs for drawbar trailers

Lifting capacity: 12000 kg
Vertical load: 25000 kg
Lifting per crank turn:
– Low gear: 0.9 mm
– High gear: 15.0 mm
Back plate: Double plate
Material: Steel
Surface: powder-coated
Surface colour: black

Scope of delivery:
1 supporting leg, gear driven

Not supplied:
1 crank handle, folding, 250 mm **Article No. 207 850 001**
1 fixing plate, supplied loose **Article No. 207 850 002**

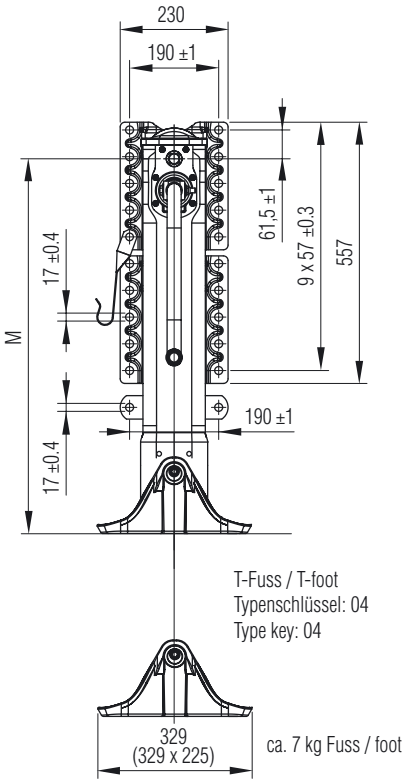

Mounting height M [mm]	Stroke N [mm]	Foot shape	**Article No.**
850	520	T	**207 850 000**

Landing legs

Landing legs for tandem trailers
Type KRA-1200 FL, without fixing bracket
Total height: 980 mm
Stroke: 450 mm
Lift load: 10000 kg
Material: Steel, primed
Weight: approx. 45.0 kg/each
Article No. 207 779 000

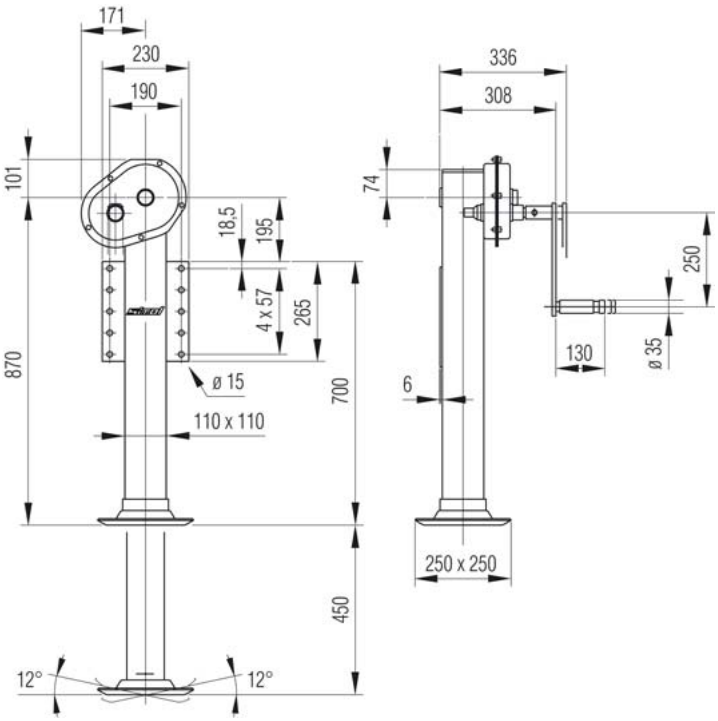

Parking support for central-axle trailer
Complete with lock pin carriage
Total height: 615 mm
Stroke: 300 mm
Stoke length: approx. 2000 kg
Tongue load: approx. 7000 kg
Spindle thread: Tr 38 x 9.2
Crank pressure: 240 kN
Transmission: 1.5
Lift/crank rotation: 6.13 mm
Material: Steel, primed
Weight: approx. 32.0 kg/each
Article No. 207 772 000

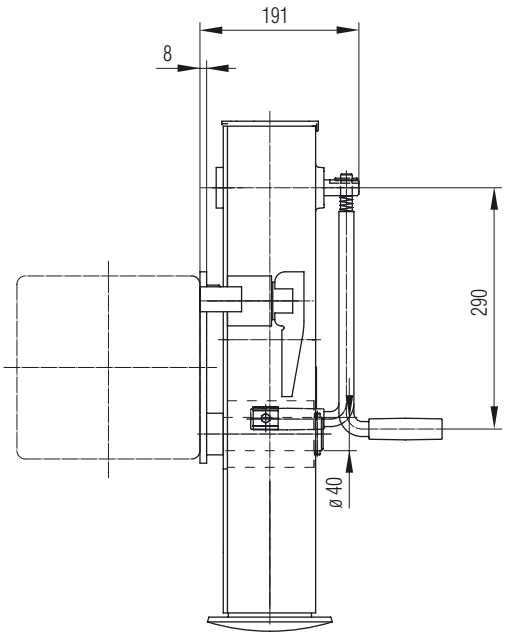

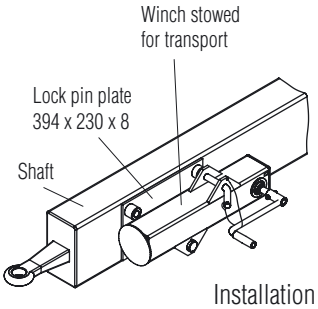

Installation example

The technical specifications contained in this brochure are approximate and no guarantee is given as to their accuracy. Designs are subject to change.

TITGEMEYER Phone: +49 (0)5 41/58 22-0 Fax: +49 (0)5 41/58 22-9910 email: export@titgemeyer.com

Landing legs

Landing legs with swivel mount

Heavy-duty construction for all types of trailer

Total height:	460 mm
Stroke:	170 mm
Tongue load:	approx. 6000 kg
Exterior tube:	70 mm square
Weight:	approx. 13.8 kg/each
Article No.	**148 976 020**

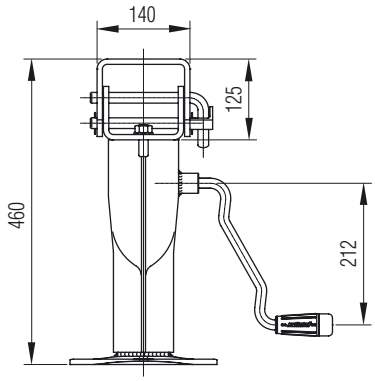

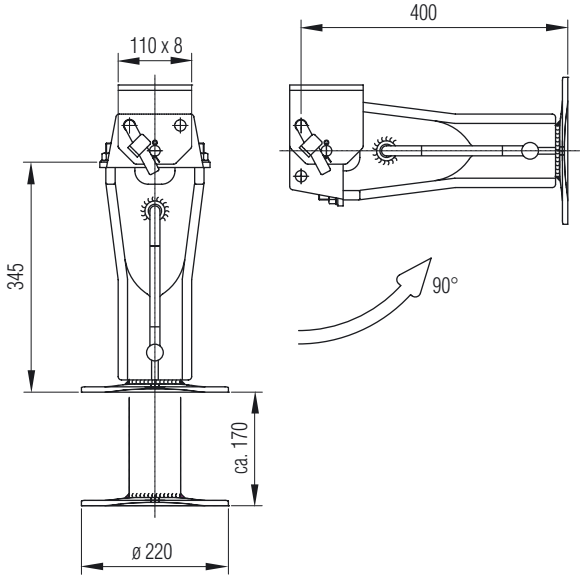

Spindle winch

To adjust the trailer towbar in height

Total height:	600 mm
Stroke:	225 mm
Perm. load pull/pressure:	
- Dynamic:	20000 kg
- Static:	5000 kg
Spindle thread:	Tr 38 x 9.2
Crank pressure:	240 kN
Transmission:	1.5
Lift/crank rotation:	6.1 mm
Material:	Steel, primed
Weight:	approx. 25.0 kg/each
Article No.	**207 773 000**

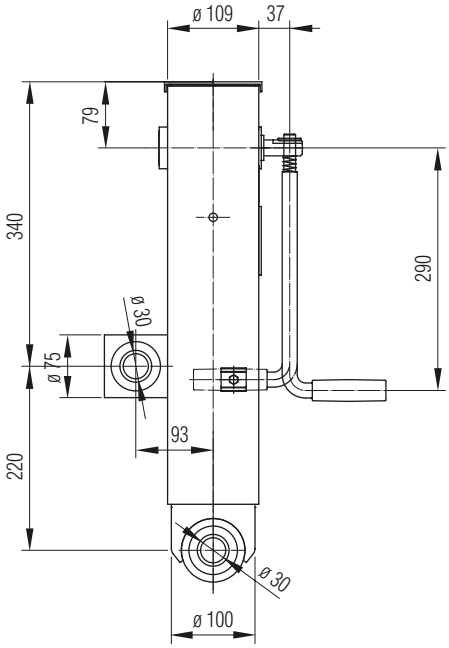

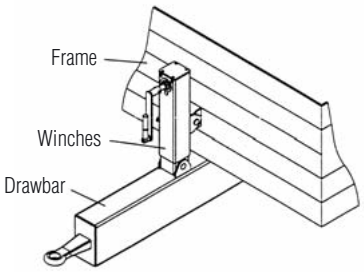

The technical specifications contained in this brochure are approximate and no guarantee is given as to their accuracy. Designs are subject to change.

Winch
To tighten the cargo
Connection: 27 mm square right
Traction capacity: 500 kg
Rope receiver: 10 m/ø 8 mm
Material: Steel, primed
Weight: approx. 5.2 kg/each
Article No. 207 928 000

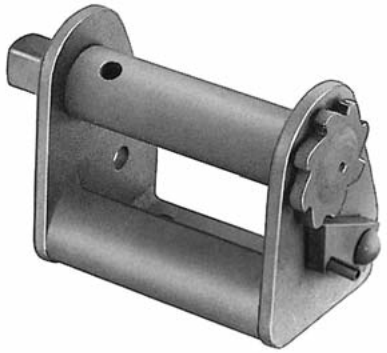
207 928 000

Suitable in addition, without illustration:
Free wheel racket, type 31 V
With interchangeable square
Size of open-end: 27 mm
Length: 400 mm
Material: Tool steel, black
Weight: approx. 0.7 kg/each
Article No. 752 083 000

Winch, type ZW 500
For strap or wire rope operation, with removable crank, solid construction for high stress, drive through mounted, worm gear free from return lifts, GS(certified security)-mark of conformity A.H.Z. II 104-82
Traction capacity: 500 daN
Material: Steel, primed
Weight: 207 930 000 - approx. 9.55 kg/each
207 931 000 - approx. 0.92 kg/each
Article No. 207 930 000 – Winch
207 931 000 – Crank

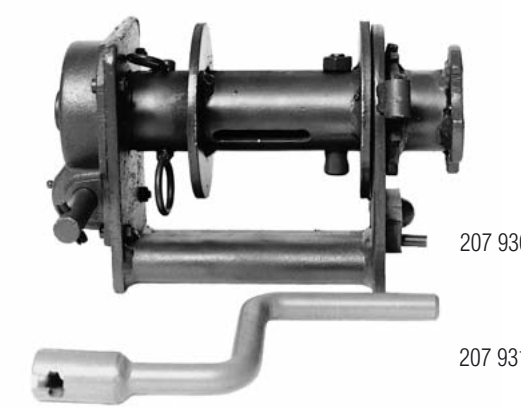
207 930 000
207 931 000

Trailer cable winch
With automatic friction disk brake and additional safety catch as transport safety device, with GS (see above) - mark of conformity and CE-Europe sign
Material: Steel, galvanised, yellow chromatised

207 971 000 – 207 976 000

Trailer cable winch

Type	Wire rope-ø [mm]	Drum capacity [m]	Crank gear	Traction power 1. rope position [N]	Traction capacity [daN]	Weight approx. [kg/each]	**Article No.**
1	4.0	16	2.0 : 1.0	2400	450	3.06	**207 971 000**
3	5.0	23	4.5 : 1.0	5400	1000	5.75	**207 973 000**

The technical specifications contained in this brochure are approximate and no guarantee is given as to their accuracy. Designs are subject to change.

Phone: +49 (0)5 41/58 22-0 Fax: +49 (0)5 41/58 22-9910 email: export@titgemeyer.com

Fixed Winches

Ratchet winch type 1557.1

With self-locking worm gear for adjustment and fixture

Perm. load:	1000 kg
Total height:	730 (1090) mm
Eye distance:	690 (1050) mm
Stroke:	360 mm
Material:	Steel, primed
Weight:	approx. 8.0 kg/each
Article No.	**207 992 000**

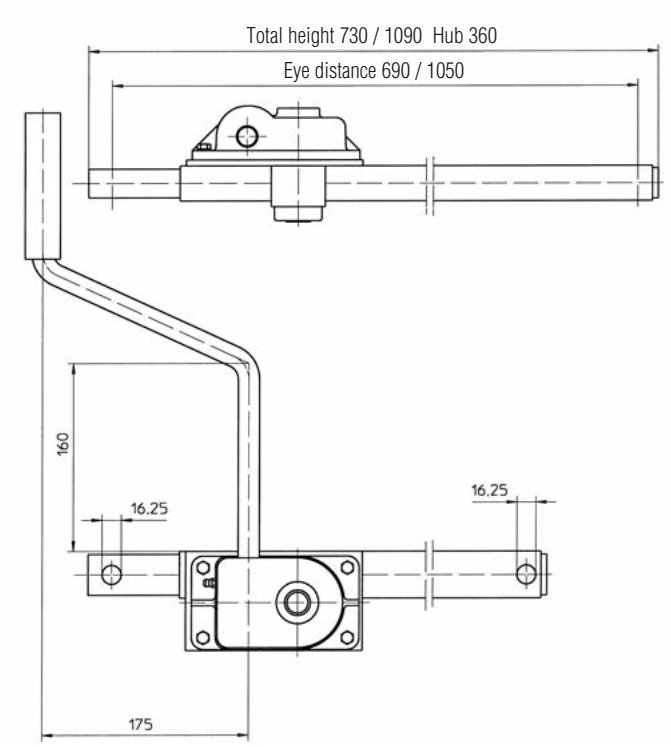

Spare wheel lifting winch

Spare wheel lifting winch
Gear self-locking, weatherproof protected worm gear

Load:	250 kg
Crank power:	6.6 daN
Thickness of rope:	6.0 up to 8.0 mm
Rope length:	3.3 m
Material:	Steel, primed
Weight:	approx. 4.1 kg/each
Article No.	**207 909 000 – winch with rigid crank handle**
	207 912 000 – winch with folding handle (without Illustration)
	207 913 000 – winch with removable crank

207 909 000

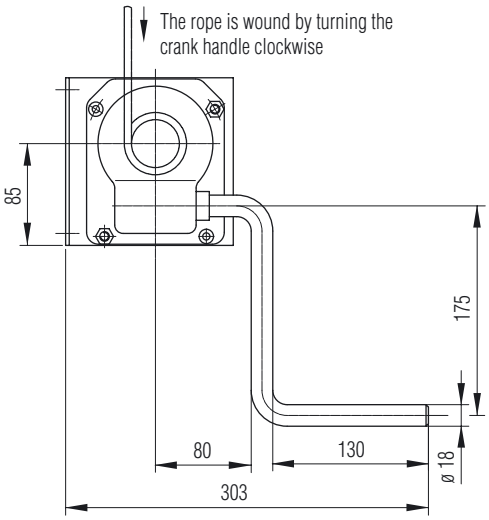

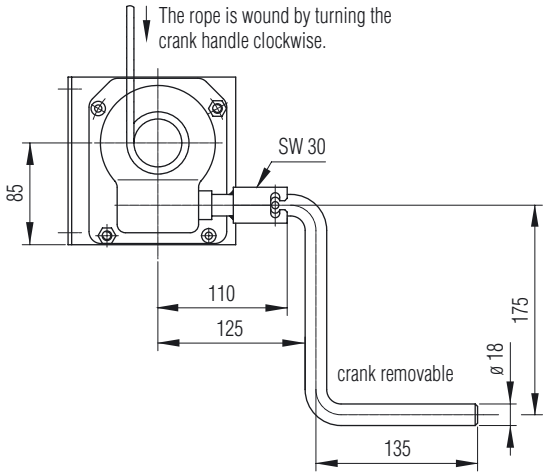

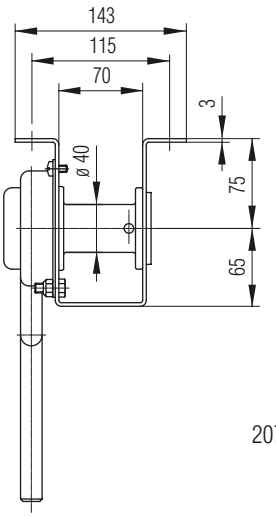

207 909 000

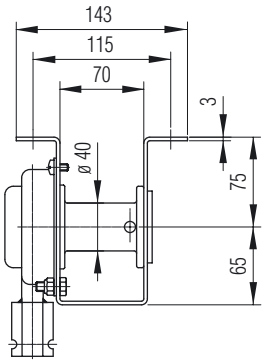

207 913 000

The technical specifications contained in this brochure are approximate and no guarantee is given as to their accuracy. Designs are subject to change.

Phone: +49 (0)5 41/58 22-0 Fax: +49 (0)5 41/58 22-9910 email: export@titgemeyer.com

Spare wheel lifting winch

Spare wheel lifting winch type E-R 90

Suitable for disk wheels with 6, 8 or 10 holes. Sheet construction with worm gear free from return lifts. Pull the spare wheel to the top through an adjustable U-iron profile with the help of a wire rope and screw it inside the sheet box from the top. This corresponds to the regulations of the trade co-operative association.
The winch has either to be screwed to the vehicle frame or to be welded and is appropriate to hold the spare wheel right-angled to the frame. The built-in worm gear is certified through the trade co-operative association in Düsseldorf (Germany) (A H II 65/81)

207 918 000

Load:	250 kg
Crank power:	daN
Thickness of rope:	8 mm
Material:	Steel, 6 mm thick
Weight:	207 918 000 – approx. 19.4 kg/each
	207 919 000 – approx. 1.5 kg/each
Article No.	**207 918 000 – Winch**
	207 919 000 – winch, removable

Also available with rigid crank on request

Wheel carrier for wheels with offset

Simple, solid holder for the installation on the outer frame

- Simple and reliable change of the spare wheel through a proven worm winch
- Security of work, since the screws are easy to access and can be released from above

This holder of spare wheels correspond to the „safety precautions for the spare-wheel accommodation on vehicles“ (trade co-operative association, committee of experts „transport“); suitable for the reception of 6, 8 and 10 hole wheels with offset and pin hole circle-ø 205, 225, 275 and 335 mm.

207 937 000

207 946 000

Kpl. = 207 938 000

Extent of supply complete as illustrated, holder with cable winch

Load:	250 kg
Crank power:	14 daN
Thickness of rope:	8 mm
Rope length:	1.75 m
Material:	Steel, primed
Weight:	207 938 000 – approx. 16.0 kg/each
	207 937 000 – approx. 14.8 kg/each
	207 946 000 – approx. 1.2 kg/each
Article No.	**207 938 000 – wheel carrier complete**
	207 937 000 – wheel carrier without wheel bracket, without rope
	207 946 000 – wheel bracket with rope

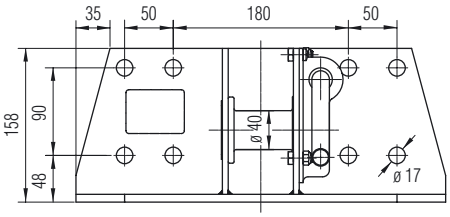

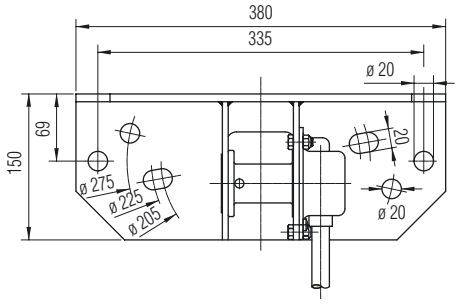

The technical specifications contained in this brochure are approximate and no guarantee is given as to their accuracy. Designs are subject to change.

Spare wheel lifting winch

Wheel carrier

Load: 250 kg
Crank power: 15 daN
Thickness of rope: 8 mm
Rope length: 1.7 m
Material: Steel, primed
Weight: 207 940 000 – approx. 15.5 kg/each
207 946 000 – approx. 1.2 kg/each

Article No. 207 940 000 – wheel carrier
207 946 000 – wheel bracket with rope for weels with offset

Please order the wheel bracket with rope separately!

207 940 000

207 946 000

207 958 000
207 959 000

207 948 000
207 950 000

Accessories for wheels without offset
Material: Steel, primed

Spacer for 10-hole wheel
Weight: 207 958 000 – approx. 6.0 kg/each
207 959 000 – approx. 9.7 kg/each
Article No. 207 958 000 – 170 mm high
207 959 000 – 230 mm high

Wheel bracket with rope, adjustable
Weight: 207 948 000 – approx. 2.7 kg/each
207 950 000 – approx. 2.4 kg/each
Article No. 207 948 000 – for 207 959 000
207 950 000 – for 207 956 000 – 207 958 000

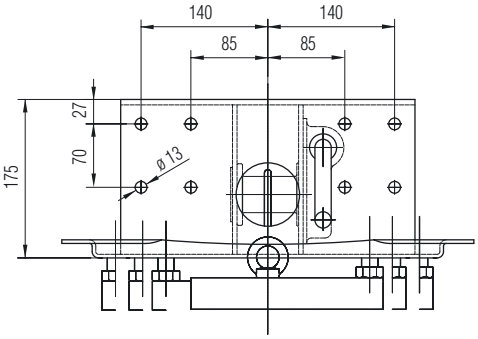

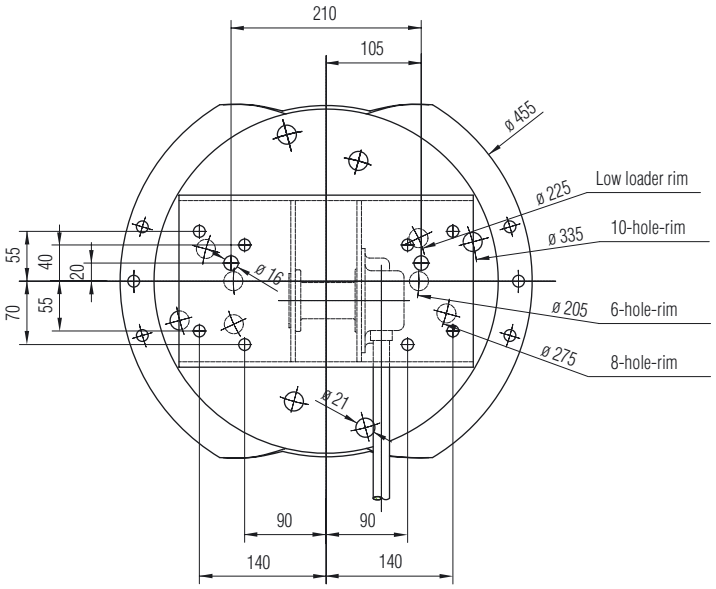

Spare wheel lifting winch

Spare wheel lifting winch
With wheel bracket for wheels with offset,
to mount onto the outer frame

Load:	250 kg
Crank power:	14 daN
Thickness of rope:	8 mm
Rope length:	2.2 m
Material:	Steel 37
Weight:	16.0 kg/each
Article No.	**207 935 000**

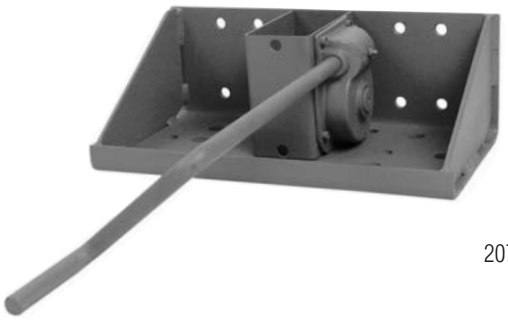

207 935 000

Spare wheel mounting
For lorry wheels with offset rims
TÜV tested
Material: Steel housing welded, primed
Assembly parts galvanised

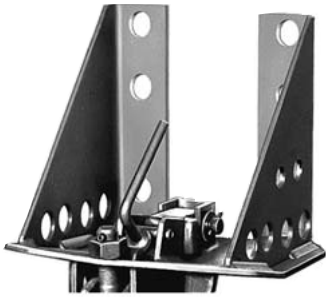

Type	No. of holes	Circle of holes ø [m]	Middle hole ø [mm]	Max. spanner size [mm]	A approx. [mm]	B [mm]	C [mm]	Weight approx. [kg/each]	**Article No.**
ERH 6-205	6	205	161	12	158	150	45	8.5	**207 964 000**
ERH 6-245	6	245	202	12	138	190	45	8.6	**207 965 000**
ERH 8-275	8	275	221	16	150	210	43	14.3	**207 966 000**
ERH 10-335	10	335	281	16	188	270	43	16.4	**207 967 000**

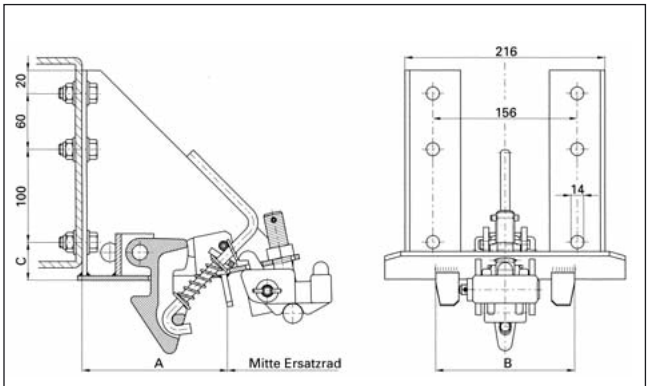

207 963 000 / 207 965 000

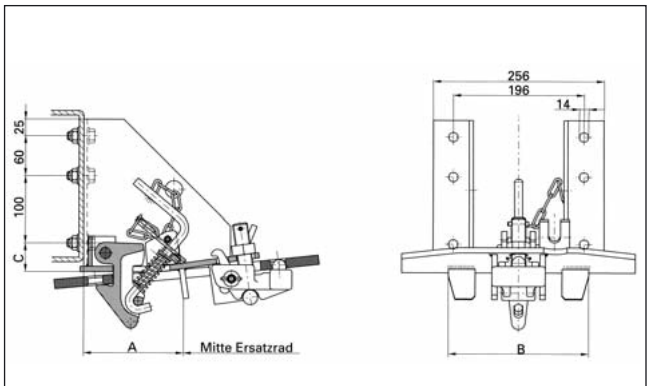

207 966 000 / 207 967 000

Fitting lever
For spare tyre bracket type ERH 8-275, ERH 10-335

Length:	700 mm
Material:	Steel, untreated
Weight:	approx. 1.2 kg/each

Article No. 207 968 000

The technical specifications contained in this brochure are approximate and no guarantee is given as to their accuracy. Designs are subject to change.

The technical specifications contained in this brochure are approximate and no guarantee is given as to their accuracy! Designs are subject to change. Our design proposals are non-binding!
TITGEMEYER. GETO Van and POP are trademarks, registered trademarks or product names belonging to the respective title holder.

Gebr. TITGEMEYER GmbH & Co. KG
Hannoversche Straße 97
(Navigation: Hettlicher Masch 2)
49084 Osnabrück, Germany
P.O. Box 43 20
49033 Osnabrück, Germany
Phone: +49 (0)5 41/58 22-0
Fax: +49 (0)5 41/58 22-9910
email: export@titgemeyer.com
www.titgemeyer.com